

Features and Benefits

- Consistent flow rate across variable pressures
- Flow range from 300 to 600 GPH (900 to 2000 LPH)* requires flooded inlet
- Horsepower required 0.35 to 2.35 hp (261 to 1.75 Watt)
- Self priming (water) and maintenance free with low vibration and pulsation characteristics
- Works with fluid with viscosity up to 100 centipoise (cP), temperature between -4°F to 194°F (-20°C to 90°C)[1]
- Stainless steel housing works with acidity > 2 pH
- Clockwise and counter clockwise rotation available

General Applications

Circulation
Reverse Osmosis
Booster Pumps
Solar Applications
Hydraulic Systems
Desalination

* GPH rating at 1725 RPM/60Hz and LPH rating at 1450 RPM/50Hz

Technical Information			
Pump Housing Material	304 Stainless Steel		
Seals	Carbon / Ceramic		
Elastomer	Nitrile or Fluorocarbon		
Valves	No valve available		
Drive configurations	Keyway		
Vanes	Carbon	Mounting Options	Bolt-on only
Ports	NPT 1"	Unit Weight	Approx. 15 LBS. (6.8 KG)

Operating Range			
Max Static Pressure	100 PSI (7 BAR)	Max Discharge Pressure	250 PSI (17 BAR)
Fluid Temperature	-4° to 194°F (-20° to 90°C)	Speed	1000 to 2100 RPM
Viscosity	100 cP	Inlet Conditions	Flooded

Series 6 Nominal Volume*										
Flow rate (GPH/LPH)	Gallons Per Hour/Liters Per Hour					Brake Horsepower/Watts (motor shaft power)				
	Pressure (PSI/Bar)					Pressure (PSI/Bar)				
	50/3.4	100/6.9	150/10.3	200/13.8	250/17.5	50/3.4	100/6.9	150/10.3	200/13.8	250/17.5
660/2,000	663/2,072	660/2,063	657/2,053	654/2,044	651/2,034	.50/373	.95/708	1.40/1,043	1.85/1,378	2.35/1,751
600/1,800	612/1,913	609/2,903	606/1,894	603/1,884	600/1,875	.50/373	.90/671	1.35/1,006	1.80/1,341	2.30/1,714
540/1,620	552/1,725	549/1,716	546/1,706	543/1,699	540/1,688	.50/373	.85/633	1.30/969	1.70/1,267	2.00/1,490
480/1,440	489/1,528	486/1,519	483/1,509	480/1,500	477/1,491	.45/335	.75/559	1.15/857	1.50/1,118	1.80/1,341
420/1,260	435/1,359	432/1,350	429/1,341	426/1,331	423/1,322	.45/335	.70/522	1.00/745	1.35/1,006	1.75/1,304
360/1,080	372/1,163	369/1,153	366/1,143	363/1,134	360/1,125	.40/298	.65/484	.95/708	1.25/931	1.55/1,155
300/900	303/947	300/938	297/928	294/919	291/909	.35/261	.55/410	.85/633	1.15/857	1.45/1,080

[1] Consult with manufacturer for extreme operating conditions
[2] Consult with manufacturer for information on other applications
[3] For certificate of compliance or declarations please visit our website or email at productcompliance@proconpump.com
* GPH rating at 1725 RPM/60Hz and LPH rating at 1450 RPM/50Hz

ROTARY VANE DIMENSIONS

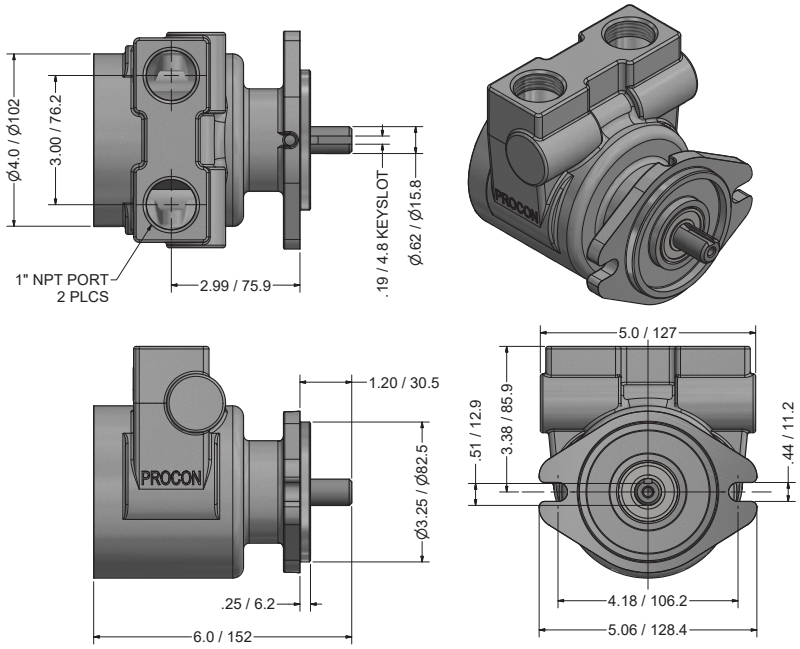

NOTE:
- Dimensions are in inches/millimeters

AMER
4600 NW Camas Meadows,
Suite 200
Camas, WA 98607
+1 360-253-2008
MVPSales@cemegroup.com

EMEA
Irishtown, Mountmellick, CO.
Laois, Republic of Ireland
00353.57.86.24350
EUSales@cemegroup.com

APAC
Room 2730, 27F, The Crest 500
West YanAn Road, Changning,
Shanghai P.R.C
+86 18621892131
sara.chen@cemegroup.com