# ROTARY VANE PUMPS

BRASS HOUSING SERIES 4
STAINLESS STEEL HOUSING SERIES 5









## Features and Benefits

- Consistent flow rate across variable pressures
- Flow range from 115 to 330 GPH (350 to 1000 LPH)*
- Horsepower required 0.15 to 1.22 hp (112 to 909 Watt)
- Self priming (water) and maintenance free with low vibration and pulsation characteristics
- Works with fluid with viscosity up to 100 centipoise (cP), temperature between -4°F to 194°F (-20°C to 90°C)[1]
- Brass housing works with TDS max 5,000
- Stainless steel housing works with acidity > 2 pH and brass housing works with asicity > 6 pH[1]
- Clockwise and counter clockwise rotation available
- Internal Relief valve configuration (also available without relief valve)
- Series 4 available in long Neck clamp-on for special applications

## General Applications

Circulation
Reverse Osmosis
Booster Pumps
Solar Applications
Hydraulic Systems
Desalination
Cooling Systems

* GPH rating at 1725 RPM/60Hz and LPH rating at 1450 RPM/50Hz

| Technical Information | | | |
|---|---|---|---|
| Pump Housing Material | Series 4 Brass (1.5%), Series 5 - 304 Stainless Steel | | |
| Seals | Carbon / Ceramic, or Carbon / Silicon Carbide (balanced and non-balanced) | | |
| Elastomer | Nitrile, EPDM, Fluorocarbon, Neoprene | | |
| Valves | Stainless steel, Brass, or Plastic (high temp ultem, low temp acetal) | | |
| Drive configuration | Single flat, Double flat or Slotted with bronze or Plastic Couplings | | |
| Vanes | Carbon | Mounting Options | Clamp-on or Bolt-on |
| Ports | G 1/2" OR NPT 1/2" | Unit Weight | Approx. 4.5 lbs. (2 kg) |

| Operating Range | | | |
|---|---|---|---|
| Max Static Pressure | 100 PSI (7 BAR) | Max Discharge Pressure | 250 PSI (17 BAR) |
| Fluid Temperature | -4° to 194°F (-20° to 90°C) | Speed | 1000 to 2400 RPM |
| Viscosity | 100 cP | Wet Lift with Water | 6 ft (2M) |

| Series 4 and 5 Nominal Volume* | | | | | | | | | | |
|---|---|---|---|---|---|---|---|---|---|---|
| Flow rate (GPH/LPH) | Gallons Per Hour/Liters Per Hour | | | | | Brake Horsepower/Watts (motor shaft power) | | | | |
| | Pressure (PSI/Bar) | | | | | Pressure (PSI/Bar) | | | | |
| | 50/3.4 | 100/6.9 | 150/10.3 | 200/13.8 | 250/17.5 | 50/3.4 | 100/6.9 | 150/10.3 | 200/13.8 | 250/17.5 |
| 330/1,000 | 331/1,034 | 330/1,031 | 328/1,025 | 327/1,022 | 326/1,019 | 0.33/246 | 0.55/410 | 0.78/581 | 1.00/745 | 1.22/909 |
| 265/800 | 265/828 | 263/822 | 261/816 | 259/809 | 257/803 | 0.24/179 | 0.43/320 | 0.63/469 | 0.82/611 | 1.01/753 |
| 240/725 | 243/759 | 240/750 | 236/738 | 232/725 | 228/713 | 0.21/157 | 0.37/276 | 0.54/402 | 0.70/522 | 0.86/641 |
| 215/650 | 218/681 | 215/672 | 211/659 | 207/647 | 203/634 | 0.20/149 | 0.35/261 | 0.50/3723 | 0.65/484 | 0.80/596 |
| 190/575 | 193/603 | 190/594 | 189/591 | 182/569 | 178/556 | 0.18/134 | 0.33/246 | 0.47/351 | 0.61/455 | 0.75/559 |
| 165/500 | 168/525 | 165/516 | 161/503 | 157/491 | 153/478 | 0.17/127 | 0.30/224 | 0.43/320 | 0.57/425 | 0.70/522 |
| 140/425 | 143/447 | 140/438 | 136/425 | 132/413 | 128/400 | 0.16/119 | 0.28/209 | 0.40/298 | 0.52/387 | 0.64/477 |
| 115/350 | 116/363 | 115/359 | 111/347 | 107/334 | 103/322 | 0.15/112 | 0.25/186 | 0.35/261 | 0.45/335 | 0.55/410 |

[1] Consult with manufacturer for extreme operating conditions
[2] Consult with manufacturer for information on other applications
[3] For certificate of compliance or declarations please visit our website or email at productcompliance@proconpump.com
* GPH rating at 1725 RPM/60Hz and LPH rating at 1450 RPM/50Hz

# ROTARY VANE DIMENSIONS

## Rotary Vane Series 4 Bolt-On Style

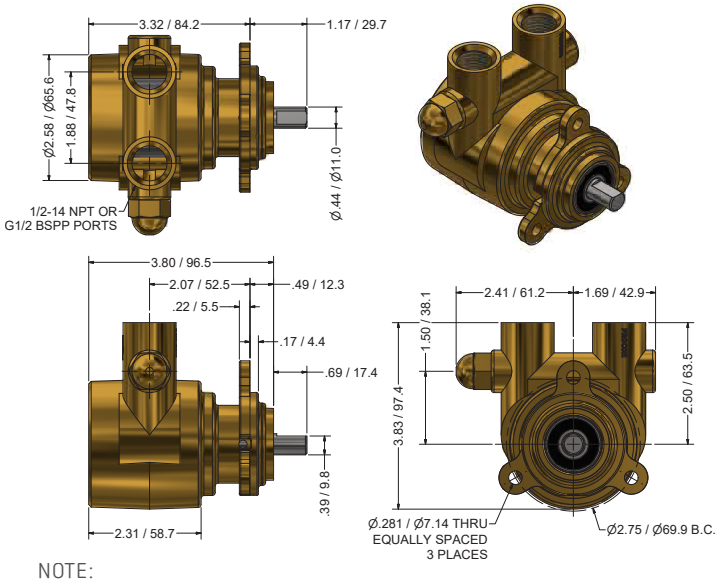


NOTE:
- Dimensions are in inches/millimeters
- Clamp-on and Bolt-on versions available in both series 4 and series 5
- Bronze and plastic coupling available for clamp-on

## Rotary Vane Series 5 Clamp-On Style

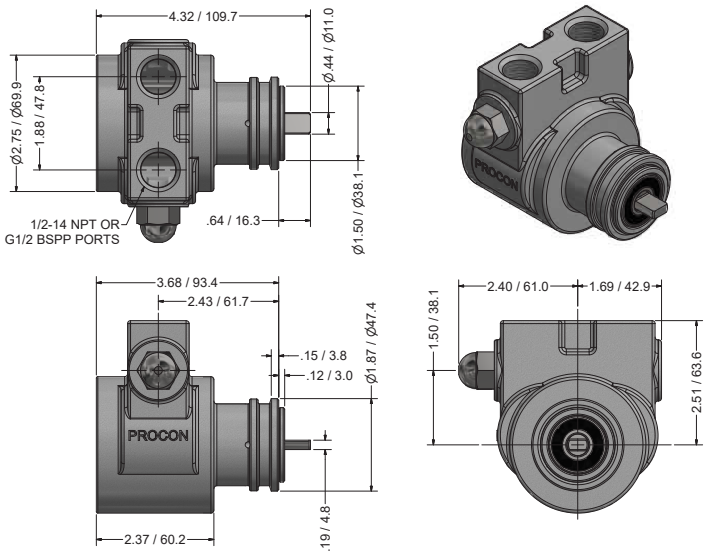


**AMER**
4600 NW Camas Meadows,
Suite 200
Camas, WA 98607
+1 360-253-2008
MVPSales@cemegroup.com

**EMEA**
Irishtown, Mountmellick, CO.
Laois, Republic of Ireland
00353.57.86.24350
EUSales@cemegroup.com

**APAC**
Room 2730, 27F, The Crest 500
West YanAn Road, Changning,
Shanghai P.R.C
+86 18621892131
sara.chen@cemegroup.com