

21A - 21L - 21AP -T0 -T3 -T4 SERIES

Solenoid valves, 2-way

Proportional solenoid valve are designed to provide a flowrate output proportional to current change. The valves have elastomeric sealing that ensure tight closure up to the maximum pressure. Minimum operational pressure is not required. Material used and frictionless plunger construction ensure reliability and long life time.
The valves can be controlled through the duty cycle of a 24 VDC PWM signal or directly by regulating the current applied to the coil.

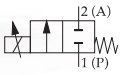

TECHNICAL DATA

PORT CONNECTION	G1/8 ÷ G1/4, PUSH-IN connections	
SEALING MATERIALS	FKM	EPDM
FLUID TEMPERATURE	-10°C +140°C	-10°C +140°C
FLUIDS	air, water, inert gases, mineral oils	air, water, inert gases
VISCOSITY	12 cSt up to orifice 1.5 mm, 37 cSt for orifice 2.0 mm, 53 cSt for orifice 2.5 mm and above	
TUBE Ø - COIL WIDTH - SERIES	ø 13 mm - 30 mm	BDA08, BVA08 (CLASS F), BDV08 (CLASS H)
	ø 13 mm - 36 mm	UDV16 (CLASS H)
	ø 13 mm - 52 mm	GDV14 (CLASS H)
PROTECTION DEGREE	IP65 EN 60529 (DIN 40050) with plug connector	
VOLTAGE REGULATION	24 V DC pulse witdth modulation (600 ÷ 800 Hz)	
HYSTERESIS	< 5%	
REPEATABILITY	< 3%	
SENSITIVITY	< 2%	

MATERIALS

BODY, ORIFICE	Brass UNI EN 12165 CW617N or stainless steel AISI 316 or PPS
ARMATURE TUBE	Stainless steel AISI 316
FIXED CORE	Stainless steel AISI Series 400
PLUNGER	Stainless steel AISI Series 400
PHASE DISPLACEMENT RING	-
SPRING	Stainless steel AISI Series 300
SEALING	V=FKM, E=EPDM

- **CE**
  - 2014/35/EU (LVD)
  - 2014/30/EU (EMC)
  - 2014/68/EU (PED) art. 4.3 up to 1", cat. I module A above 1"
- **INDUSTRIAL OXYGEN**
  Special versions suitable for contact with industrial oxygen are available.
  Please refer to codification options.
- **UL** regognized and **VDE** approved coils are available for this series, please refer to coil section.
- **NSF/ANSI 169** certification (Special Food Equipment and Devices) is available for this series, Please find the correspondend symbol in the next pages. Valves with NSF approval are in compliance with CE regulation 1935/2004.

Please read and agree our GENERAL CONDITIONS before placing an order. All the information are exclusive ownership of ODE S.r.l. All rights reserved ©ODE S.r.l.

- The fluids listed in the "technical data" tables should be considered as a recommendation.
  Please check the chemical compatibility of the fluids with the materials of the valve at RFQ stage.
- Please check the engineering information for further details on viscosity.
- These solenoid valves are not suitable for stagnating fluids, or for fluids that being subject to evaporation may deposit solid, calcareous or similar residues.
- For control options please refer to +SMART chapter.

BRASS, G1/4

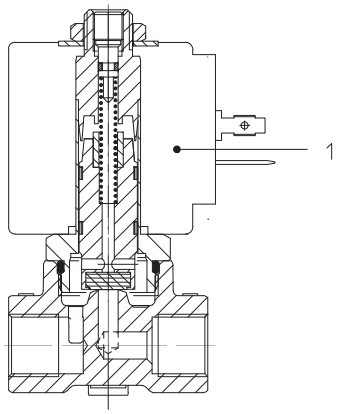

DRAWING 1

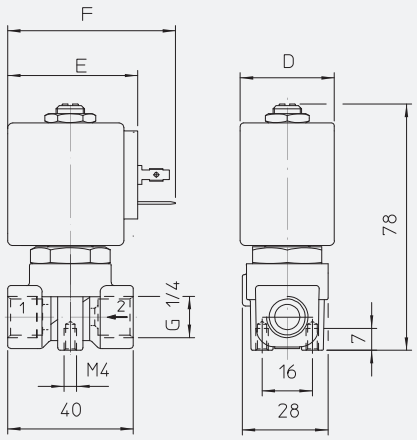

DRAWING 2

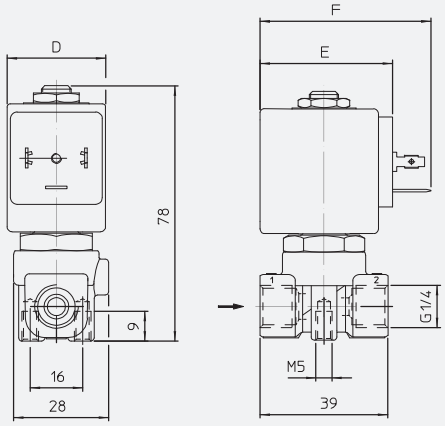

DRAWING 3

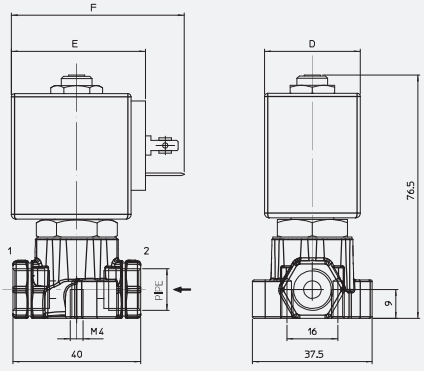

DRAWING 4

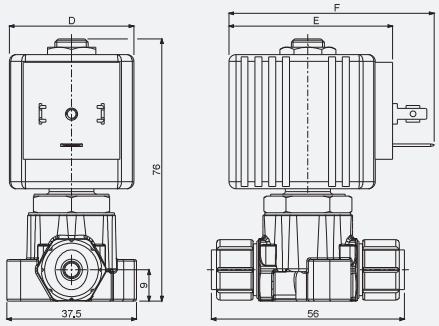

COILS SERIES	DIMENSIONS [mm]		
	D	E	F
B**08	30	42	54
UDV16	36	48	60

■ The valves can be mantained in a stable position only if the current circluating in the coil is kept constans. If the valve is controlled through voltage variation, it is necessary to compensate the power decrease due to heating effect by increasing the voltage, so to re-establish the initial current value.

PIPE	ORIFICE SIZE	Kv	COIL SERIES	PRESSURE [bar]		CODE		DRAWING REFERENCE
ISO 228/1	Ø [mm]	[l/min]		MIN	MOPD (DC)	BRASS	STAINLESS STEEL	
G1/4	1,0	1,4	B**08	0	4	21A2KCV10-04	-	1
			UDV16	0	4	21A2KCV10-04	-	1
		0,45	B**08	0	10	21A2KCV10-10	-	1
			UDV16	0	10	21A2KCV10-10	-	1
	1,5	1,4	B**08	0	10	21A2KCV15-10	-	1
			UDV16	0	10	21A2KCV15-10	-	1
	2,0	2	B**08	0	4	21A2KCV20-04	-	1
			UDV16	0	4	21A2KCV20-04	-	1
		2	B**08	0	6	21A2KCV20-06	-	1
			UDV16	0	-	-	-	-
		2	B**08	0	10	21A2KCV20-10	21L2KCV20-10	1 (brass), 2 (StSt)
			UDV16	0	10	21A2KCV20-10	-	1
		2	B**08	0	12	21A2KCV20-12	-	1
			UDV16	0	-	-	-	-
	2,5	2,5	B**08	0	8	21A2KCV25-08	-	1
			UDV16	0	8	21A2KCV25-08	-	1
	3,0	4	B**08	0	5	21A2KCV30-05	-	1
			UDV16	0	5	21A2KCV30-05	-	1
		4	B**08	0	6,5	21A2KCV30-6X	21L2KCV30-6X	1 (brass), 2 (StSt)
			UDV16	0	6,5	21A2KCV30-6X	-	1
	4,5	6,5	B**08	0	1,5	21A2KCV45-1X	21L2KCV45-1X	1 (brass), 2 (StSt)
			UDV16	0	1,5	21A2KCV45-1X	21L2KCV45-1X	1 (brass), 2 (StSt)
		6,4	UDV16	0	2	21A2KCV45-02	-	1
			GDV14	0	2	21A2KCV45-02	-	1
		6,5	UDV16	0	2,5	21A2KCV45-2X	-	1
			GDV14	0	2,5	21A2KCV45-2X	21L2KCV45-2X	1 (brass), 2 (StSt)
	5,5	9	UDV16	0	1	21A2KCV55-01	-	1
			GDV14	0	1	21A2KCV55-01	-	1

■ For sealing different from FKM, replace the letter "V" with the ones corresponding to the other materials.
V= FKM, E=EPDM.

PIPE	ORIFICE SIZE	Kv	COIL SERIES	PRESSURE [bar]		CODE	DRAWING REFERENCE
ISO 228/1	Ø [mm]	[l/min]		MIN	MOPD (DC)	PPS	
G1/8	1,5	1,1	B**08	0	10	21AP1KCV15-10	3
	2,5	2,5	UDV16	0	5	21AP1KC4V25-1FT0	3
	3,0	3,4	B**08	0	5	21AP1KC4V30-1BT0	3
			UDV16	0	5	21AP1KC4V30-1BT0	3
			B**08	0	1	21AP1KC4V30-1CT0	3
			UDV16	0	1	21AP1KC4V30-1CT0	3
G1/4	1,5	1,4	B**08	0	8	21AP2KC4V15-1Q	3
			B**08	0	8	21AP2KC4V15-1QT0	3
	2	1,8	UDV16	0	10	21AP2KCV20-10	3
	3,0	3,4	B**08	0	5	21AP2KCV30-05	3
		3,4	UDV16	0	5	21AP2KCV30-05	3
PUSH-IN Ø6 mm	3,0	3,4	UDV16	0	2,6	21AP6KC4V30-1IT0	4

I	II	III	IV	V	VI	VII	VIII		IX	X
2	1	A	2	KC		V	15	-	10	

I. NUMBER OF WAYS
2 - 2-way

II. NUMBER OF ELEMENTS
1 - 1 element

III. SERIES
A - brass body, Ø13 mm core tube
AP - PPS body, Ø13 mm core tube
L - StSt body, Ø13 mm core tube

IV. CONNECTIONS
2 - G1/4
3 - G1/8
6 - PUSH IN for OD 6 mm (only for AP series)

V. CORE TUBE TYPE
KC - for 2/2 proportional valves

VI. PHASE DISP. RING MATERIAL
blank - without
4 - without (for NSF approved valves)

VII. SEALING MATERIAL
V - FKM
E - EPDM

VIII. ORIFICE Ø [mm] MULTIPLIED BY 10

IX. MAXIMUM PRESSURE
12 - 12 bar
10 - 10 bar
08 - 8 bar
6X - 6.5 bar
05 - 5 bar
04 - 4 bar
2X - 2.5 bar
02 - 2 bar
1X - 1.5 bar
01 - 1 bar
For NSF approved valves
1Q - 8 bar
1F - 5 bar
1B - 5 bar
1I - 2.6 bar
1C - 1 bar

X. NSF CERTIFICATION
T0 - PPS body
T3 - Low lead brass body
T4 - StSt body

+SMART ONE

+SMART CUBE

■ For control options please refer to +SMART chapter.

