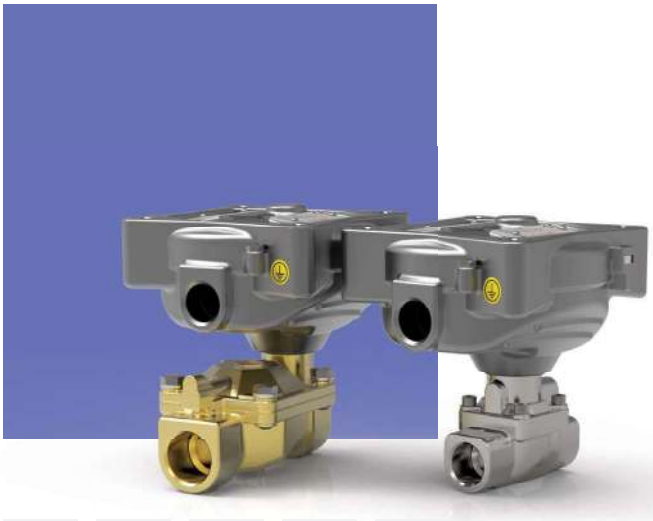

21WA - W - 21X SERIES

Solenoid Valves, 2-way, Indirect acting

21WA-W and **21X** are indirect acting solenoid valves.
A minimum operating pressure differential of 0,1-0,2 bar is required for correct operation.
A large selection of seal materials provides wide chemical compatibility.



TECHNICAL DATA

PORT CONNECTION	G3/8 ÷ G2			
SEALING MATERIALS	NBR	FKM	EPDM	HNBR
FLUID TEMPERATURE	-10°C +80°C	-10°C +80°C	-10°C +80°C	-30°C +80°C
FLUIDS	Air, inert gas, water	oils, gasoline, diesel	Water, steam	air, inert gases, water, R134a, R404a
VISCOSITY	max. 12 cSt			
TUBE Ø - COIL WIDTH - SERIES	Ex mb	10 - 36 mm	TNA (class F)	
	Ex d	8 - 30 mm	BDV (class H)	
INSTALLATION	as required, preferably with actuator upright			
PROTECTION DEGREE	Ex mb	IP65 EN 60529 (DIN 40050)		
	Ex d	IP67 EN 60529 (DIN 40050) with cable gland IP67 or higher		

MATERIALS

BODY, ORIFICE	Brass UNI EN 12165 CW617N or stainless steel AISI 316
ARMATURE TUBE	Stainless steel AISI Series 300
FIXED CORE	Stainless steel AISI Series 400
PLUNGER	Stainless steel AISI Series 400
PHASE DISPLACEMENT RING	Copper (Cu 99,9%) or gold plated copper
SPRING	Stainless steel AISI Series 300
SEALING	B=NBR, V=FKM, E=EPDM, F=HNBR

- **CE**
  - 2014/35/EU (LVD)
  - 2014/30/EU (EMC)
  - 2014/68/EU (PED) art. 4.3 up to 1", cat. I module A above 1"
  - 2014/34/EU (ATEX). Refer to next pages for the complete marking

- **INDUSTRIAL OXYGEN**
  Special versions suitable for contact with industrial oxygen are available.
  Please refer to codification options.

- **UL** regognized and **VDE** approved coils are available for this series, please refer to coil section.

- The fluids listed in the "technical data" tables should be considered as a recommendation. Please check the chemical compatibility of the fluids with the materials of the valve at RFQ stage.
- Operation with gases at high differential pressure can reduce the life of the diaphragm.
- For spare parts list please refer to the dedicated chapter.

Please read and agree our GENERAL CONDITIONS before placing an order. All the information are exclusive ownership of ODE S.r.l. All rights reserved ©ODE S.r.l.

NC, BRASS, UP TO 1/2", Ex mb

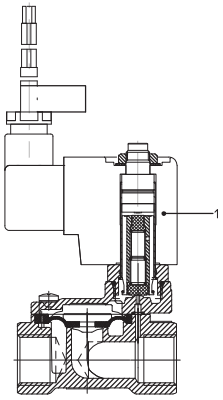

NC, BRASS. UP TO 2", Ex d

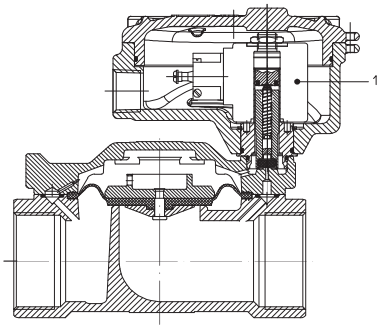

NC, STAINLESS STEEL, UP TO 3/4", Ex d

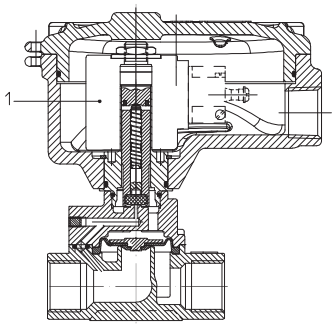

DRAWING 1

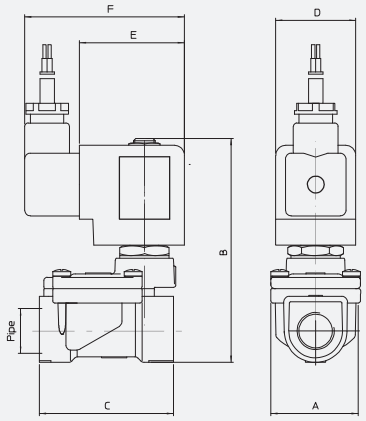

PIPE	DIMENSIONS [mm]					
ISO 228/1	A	B	C	D	E	F
G3/8	40	103	60	36	47	76
G1/2	40	103	66			

DRAWING 2

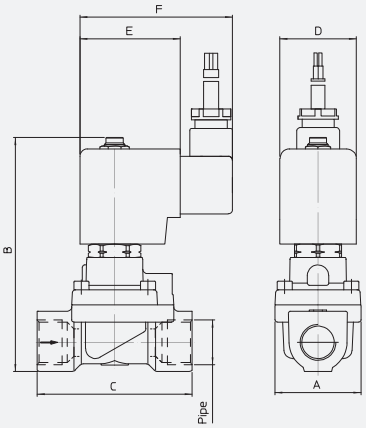

PIPE	DIMENSIONS [mm]					
ISO 228/1	A	B	C	D	E	F
G1/2	40	110	73	36	47	76
G3/4	65	120	104			
G1	65	120	104			

DRAWING 3

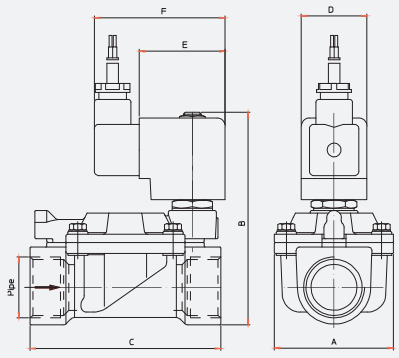

PIPE	DIMENSIONS [mm]					
ISO 228/1	A	B	C	D	E	F
G3/4	65	111	104	36	47	76
G1	65	118	104			
G1 1/4	98	131	144			
G1 1/2	98	131	144			
G2	118	147	162			

DRAWING 4

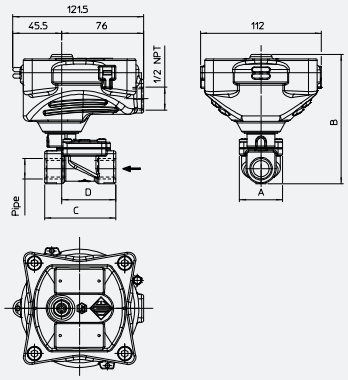

PIPE	DIMENSIONS [mm]			
ISO 228/1	A	B	C	D
G3/8	40	120	60	47
G1/2			66	50

DRAWING 5

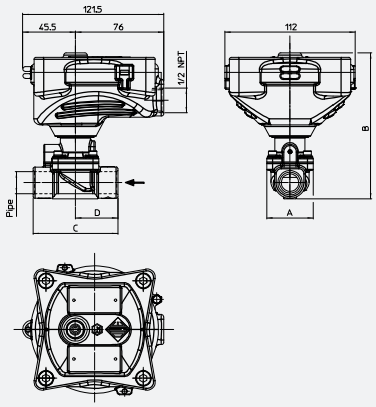

PIPE	DIMENSIONS [mm]			
ISO 228/1	A	B	C	D
G1/2	40	120	73	36,5
G3/4	65	136	104	88,5
G1				

DRAWING 6

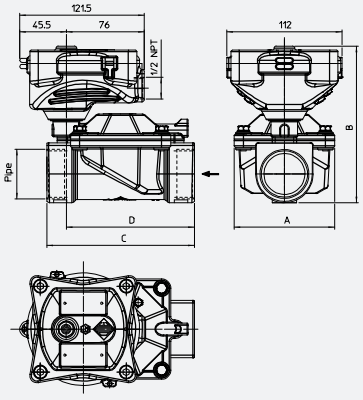

PIPE	DIMENSIONS [mm]			
ISO 228/1	A	B	C	D
G3/4	65	128	104	89
G1	65	136	104	89
G1 1/4	98	153	144	125
G1 1/2	98	153	144	125
G2	118	144	172	150

Ex mb - 2/2 NC

PIPE	ORIFICE SIZE	Kv	COIL SERIES	PRESSURE [bar]				CODE		DRAWING REFERENCE
ISO 228/1	Ø [mm]	[l/min]		MIN	MOPD AC	MOPD DC	PS	BRASS	STAINLESS STEEL	
G3/8	13	60	TNA	0,2	16	16	25	21WA3QDV130	-	1
G1/2	12	35	TNA	0,1	16	16	25	-	21X2QDV120	2
	13	70	TNA	0,2	16	16	25	21WA4QDV130	-	1
G3/4	19	130	TNA	0,1	16	16	25	-	21X3QDV190	2
		140	TNA	0,2	16	16	25	21W3QDV190	-	3
G1	25	160	TNA	0,1	16	16	25	-	21X4QDV250	2
		190	TNA	0,2	16	16	25	21W4QDV250	-	3
G1 1/4	35	400	TNA	0,2	10	10	16	21W5QDV350	-	3
G1 1/2	40	520	TNA	0,2	10	10	16	21W6QDV400	-	3
G2	50	750	TNA	0,2	10	10	16	21W7QDV500	-	3

- For sealing different from NBR and FKM, replace the letter "B" and "V" with the ones corresponding to the other materials.
  Brass Body: V= FKM, F=HNBR
  Stainless Steel Body: V= FKM

According to Directive 2014/34/EU ATEX
II 2 G Ex mb IIC T4 Gb
II 2 D Ex mb tb IIIC T130°C Db

Ex d - 2/2 NC

PIPE	ORIFICE SIZE	Kv	COIL SERIES	PRESSURE [bar]				CODE		DRAWING REFERENCE
ISO 228/1	Ø [mm]	[l/min]		MIN	MOPD AC	MOPD DC	PS	BRASS	STAINLESS STEEL	
G3/8	13	60	BDV08	0,2	16	16	25	21WA3KIB130	-	4
G1/2	12	35	BDV08	0,1	16	16	25	-	21X2KIV120	5
	13	70	BDV08	0,2	16	16	25	21WA4KIB130	-	4
G3/4	19	130	BDV08	0,1	16	16	25	-	21X3KIV190	5
		140	BDV08	0,2	16	16	25	21W3KIB190	-	6
G1	25	160	BDV08	0,1	16	16	25	-	21X4KIV250	5
		190	BDV08	0,2	16	16	25	21W4KIB250	-	6
G1 1/4	35	400	BDV08	0,2	10	10	16	21W5KIB350	-	6
G1 1/2	40	520	BDV08	0,2	10	10	16	21W6KIB400	-	6
G2	50	750	BDV08	0,2	10	10	16	21W7KIB500	-	6

- For sealing different from NBR and FKM, replace the letter "B" and "V" with the ones corresponding to the other materials.
  Brass Body: B=NBR, V= FKM, E=EPDM, F=HNBR
  Stainless Steel Body: V= FKM, E=EPDM, F=HNBR

Ex d - 2/2 NO

PIPE	ORIFICE SIZE	Kv	COIL SERIES	PRESSURE [bar]				CODE		DRAWING REFERENCE
ISO 228/1	Ø [mm]	[l/min]		MIN	MOPD AC	MOPD DC	PS	BRASS	STAINLESS STEEL	
G3/8	13	60	BDV08	0,2	16	16	25	21WA3ZIB130	-	4
G1/2	12	35	BDV08	0,1	16	16	25	-	21X2ZIV120D	5
	13	70	BDV08	0,2	16	16	25	21WA4ZIB130	-	4
G3/4	19	130	BDV08	0,1	16	16	25	-	21X3ZIV190D	5
		140	BDV08	0,2	16	16	25	21W3ZIB190	-	6
G1	25	160	BDV08	0,1	16	16	25	-	21X4ZIV250D	5
		190	BDV08	0,2	16	16	25	21W4ZIB250	-	6
G1 1/4	35	400	BDV08	0,2	10	10	16	21W5ZIB350	-	6
G1 1/2	40	520	BDV08	0,2	10	10	16	21W6ZIB400	-	6
G2	50	750	BDV08	0,2	10	10	16	21W7ZIB500	-	6

- For sealing different from NBR and FKM, replace the letter "B" and "V" with the ones corresponding to the other materials.
  Brass Body: B=NBR, V= FKM, E=EPDM, F=HNBR
  Stainless Steel Body: V= FKM, E=EPDM, F=HNBR

According to Directive 2014/34/EU ATEX
II 2G Ex d IIC T6 o T5 Gb
II 2D Ex tb IIIC T80°C o T95°C Db IP67

CODIFICATION

I	II	III	IV	V	VI	VII		VIII
2	1	WA	3	QD	B	130	-	

I. NUMBER OF WAYS
2 - 2-way

II. NUMBER OF ELEMENTS
1 - 1 element

III. SERIES
WA - G3/8 and G1/2, brass body
W - above G1/2, brass body
X - StSt body

IV. CONNECTIONS
for WA series
3 - G3/8
4 - G1/2
for W and X series
3 - G3/4
4 - G1
5 - G1 1/4
6 - G1 1/2
7 - G2
8 - G2 1/2
9 - G3

V. CORE TUBE TYPE
QD - 2/2 NC, 'mb' protection type
KI - 2/2 NC, 'd' protection type
ZI - 2/2 NO, 'd' protection type

VI. SEALING MATERIAL
V - FKM
E - EPDM
B - NBR
F - HNBR

VII. ORIFICE Ø [mm] MULTIPLIED BY 10

VIII. OPTIONS
OX - degreasing for industrial oxygen use

OPTIONS AVAILABILITY

OPTION	PROTECTION TYPE	BODY MATERIAL	SEALING MATERIAL	VALVE SIZE/CONNECTIONS							NOTES
				G3/8	G1/2	G3/4	G1	G1 1/4	G1 1/2	G2	
OX	'D'	BRASS & STST	V	X	X	X	X	X	X	X	PS & MOPD limited to 25 bar. Shall not be used as safety valves

■ Please contact ODE if you wish to combine more options.