

31JN - 31JL - 31JP -T0 -T3 -T4 SERIES

Food Grade - 3-way - direct acting

31JN - 31JL - 31JP Series are compact 2-way direct acting valves with 10 mm armature tube. Thanks to a wide range of flow and pressure ratings these valves can be suitable for several applications. The armature tube is made of stainless steel to ensure greater strength and durability to the valve.

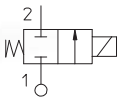

1

TECHNICAL DATA

PORT CONNECTION	G1/8 (M and F), plug-in, hose connection, PUSH-IN for OD 4, 6 mm	
SEALING MATERIALS	FKM	EPDM
FLUID TEMPERATURE	-10°C +140°C	-10°C +140°C
FLUIDS	Air, water, steam	
VISCOSITY	12 cSt up to orifice 1.5 mm, 37 cSt for orifice 2.0 mm and above	
TUBE Ø - COIL WIDTH - SERIES	ø 10 mm - 22 mm	LBV05 (class H)
INSTALLATION	as required, preferably with actuator upright	
PROTECTION DEGREE	IP65 EN 60529 (DIN 40050) with plug connector	

MATERIALS

BODY, ORIFICE	Low lead brass, stainless steel AISI 316 or PPS
ARMATURE TUBE	Stainless steel AISI Series 300
FIXED CORE	Stainless steel AISI Series 400
PLUNGER	Stainless steel AISI Series 400
PHASE DISPLACEMENT RING	Copper (Cu 99,9%) or gold plated copper
SPRING	Stainless steel AISI Series 300
SEALING	V=FKM, E=EPDM

- V = FKM+EPDM for valves with PPS body and PUSH IN connections.

- **CE**
  - 2014/35/EU (LVD)
  - 2014/30/EU (EMC)
  - 2014/68/EU (PED)

  art. 4.3 up to 1"

- **UL** regognized and **VDE** approved coils are available for this series, please refer to coil section.

- **NSF/ANSI 169** certification (Special Food Equipment and Devices) is available for this series, Valves with NSF approval are in compliance with CE regulation 1935/2004. List of certified product codes available in the following tables.

Please read and agree our GENERAL CONDITIONS before placing an order. All the information are exclusive ownership of ODE S.r.l. All rights reserved ©ODE S.r.l.

- The fluids listed in the "technical data" tables should be considered as a recommendation. Please check the chemical compatibility of the fluids with the materials of the valve at RFQ stage.
- G type thread in accordance with ISO 228/1.
- For spare parts list please refer to the dedicated chapter.

3/2 NC, PUSH IN

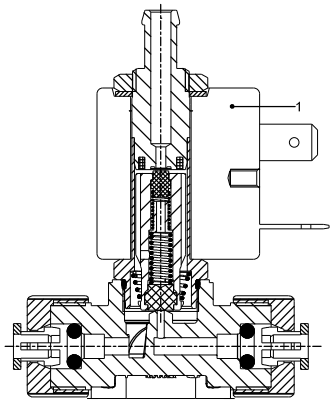

BRASS, G1/8

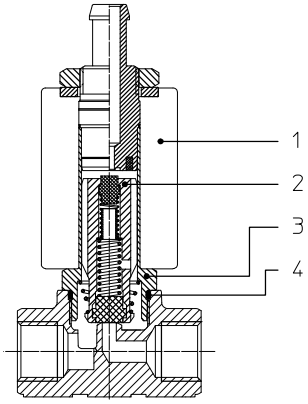

DRAWING 1

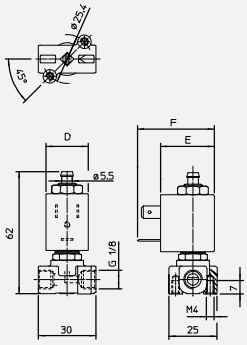

DRAWING 2

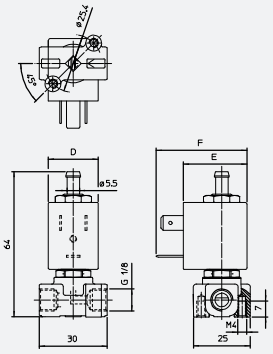

DRAWING 3

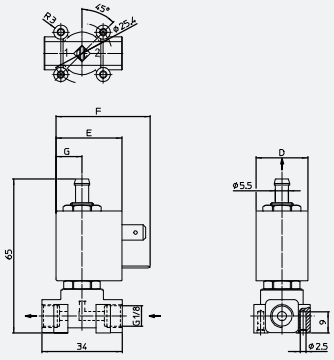

DRAWING 4

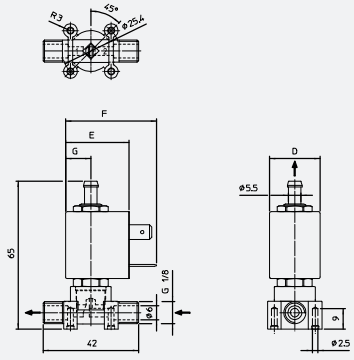

DRAWING 5

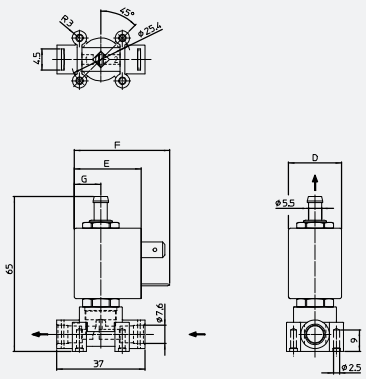

DRAWING 6

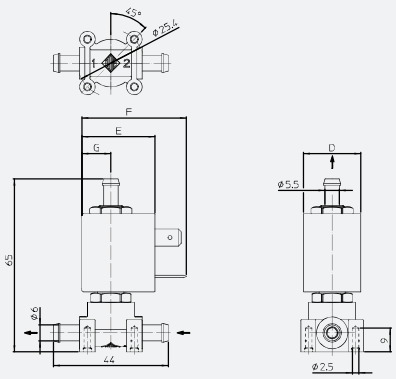

3/2 NC FKM SEALING HOSE EXAUST

DRAWING 7

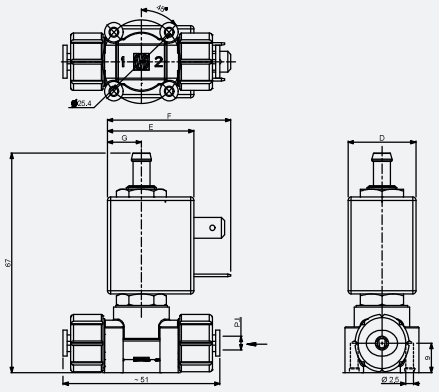

COIL SERIES	DIMENSIONS [mm]			
	D	E	F	G
LBV05	22	28±1	39,5	11

PIPE	ORIFICE SIZE [mm]	Kv [l/min]	COIL SERIES	PRESSURE [bar]				CODE			DRAWING REF.
				MIN.	MOPD		PS	BRASS	STAINLESS STEEL	PPS	
					AC	DC					
G1/8	1,2	0,6	LBV05	0	15	15	16	-	-	31JP1XP1V12-ST0	3
		0,65	LBV05	0	15	-	16	-	-	31JP1XP1V12-T0	3
		0,6	LBV05	0	15	15	40	31JN1XP1V12-ST3	31JL1XP1V12-ST4	-	2
		0,65	LBV05	0	15	-	40	31JN1XP1V12-T3	31JL1XP1V12-T4	-	2
	2	1,4	LBV05	0	-	8	40	31JN1XP1V20-ST3	31JL1XP1V20-ST4	-	2
		1,7	LBV05	0	8	-	40	31JN1XP1V20-T3	-	-	2
	2,3	1,9	LBV05	0	5	5	16	-	-	31JP1XP1V23-ST0	3
		2,4	LBV05	0	5	-	16	-	-	31JP1XP1V23-T0	3
		1,9	LBV05	0	5	5	40	31JN1XP1V23-ST3	-	-	2
		2,4	LBV05	0	5	-	40	31JN1XP1V23-T3	-	-	2
G1/8 (M)	1,2	0,6	LBV05	0	15	15	16	-	-	31JPAXP1V12-ST0	4
		0,65	LBV05	0	15	-	16	-	-	31JPAXP1V12-T0	4
	2,3	1,9	LBV05	0	5	5	16	-	-	31JPAXP1V23-ST0	4
		2,4	LBV05	0	5	-	16	-	-	31JPAXP1V23-T0	4
Plug in	1,2	0,6	LBV05	0	15	15	16	-	-	31JPBXP1V12-ST0	5
		0,65	LBV05	0	15	-	16	-	-	31JPBXP1V12-T0	5
	2,3	1,9	LBV05	0	5	5	16	-	-	31JPBXP1V23-ST0	5
		2,4	LBV05	0	5	-	16	-	-	31JPBXP1V23-T0	5
Hose conn. Ø 6	1,2	0,6	LBV05	0	15	15	16	-	-	31JPPXP1V12-ST0	6
		0,65	LBV05	0	15	-	16	-	-	31JPPXP1V12-T0	6
	2,3	1,9	LBV05	0	5	5	16	-	-	31JPPXP1V23-ST0	6
		2,4	LBV05	0	5	-	16	-	-	31JPPXP1V23-T0	6
PUSH IN OD 4 mm	1,2	0,6	LBV05	0	15	15	16	-	-	31JP5XP1V12-ST0	7
	2,3	1,9	LBV05	0	5	5	16	-	-	31JP5XP1V23-ST0	7
PUSH IN OD 6 mm	1,2	0,6	LBV05	0	15	15	16	-	-	31JP6XP1V12-ST0	7
	2,3	1,9	LBV05	0	5	5	16	-	-	31JP6XP1V23-ST0	7

- For sealing different from FKM, replace the letter "V" with the ones corresponding to the other seals. V=FKM, E=EPDM
- 3rd way exhaust Ø1.7 mm
- For JP series: For application with steam or with PS > 16 bar please consult our Technical Service
- The Kv values refer to the orifice and do not take into account any reductions due to the size of the connection pipe
- Coil nut assembly 2 Nm max, armature tube 4 Nm
- For tubes: PA and PTFE tolerance max (±0,1)
- Available on request and with minimum quantities

CODIFICATION

I	II	III	IV	V	VI	VII	VIII	IX		X	XI
3	1		JN	1	XP	1	V	12	-		T3

I. NUMBER OF WAYS
3 - 3 - way

II. NUMBER OF ELEMENTS
1 - 1 element

III. ARMATURE TUBE MATERIAL
Blank - std
6 - AISI 316 (optional, valid for NC versions, brass and PPS body only)

IV. SERIES
JN - low lead brass body
JL - StSt body
JP - PPS body

V. CONNECTIONS
For JN, JL Series
1 - G 1/8 (F)

For JP Series
1 - G 1/8 (F)
A - G 1/8 (M)
B - Plug in
P - hose connection 6 mm
5 - PUSH IN for OD 4 mm
6 - PUSH IN for OD 6 mm

VI. CORE TUBE TYPE*
XP - 3/2, hose conn., exhaust Ø 1.7 mm
W - 3/2, M5 (F), exhaust Ø 1.7 mm

VII. PHASE DISP. RING MATERIAL
0 - copper
1 - gold plated copper

VIII. SEALING MATERIAL
V - FKM
E - EPDM

IX. ORIFICE Ø [mm] MULTIPLIED BY 10

X. ADDITIONAL LETTER
S - short stroke (optimized for DC)

XI. NSF CERTIFICATION
For JN series
T3 - Low lead brass body
For JL series
T4 - StSt body
For JP series
T0 - PPS body

■ *Other exaust diameters and connections available on request.

1