

31A-31L-31ALB-31AP -T0 -T3 -T4 SERIES

Food Grade, 3way, Direct Acting

31A, 31L and **31AP** are direct acting solenoid valves. The fixed core and armature tube are welded together to enhance pressure resistance and leak-tightness. Valves do not require a minimum operating pressure.
AC/DC interchangeability of the coil is possible for both NC and NO configurations.

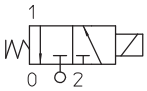

1

TECHNICAL DATA

PORT CONNECTION	G1/8, G1/4, Flange connection, PUSH-IN for OD 4, 6, 8 mm		
SEALING MATERIALS	FKM	EPDM*	RUBY
FLUID TEMPERATURE	-10°C +140°C	-10°C +140°C	-40°C +180°C
FLUIDS	Water, steam, air	Water, steam	Water, steam
VISCOSITY	12 cSt up to orifice 1.5 mm, 37 cSt for orifice 2.0 mm, 53 cSt for orifice 2.5 mm and above		
TUBE Ø - COIL WIDTH - SERIES	ø 13 mm - 30 mm	BDV08 (CLASS H)	
INSTALLATION	As required, preferably with actuator upright		
PROTECTION DEGREE	IP 65 EN 60529 (DIN 40050) with connector		

- * Available on request with minimum order quantity.

MATERIALS

BODY	Low lead brass, stainless steel AISI 316 or PPS
ORIFICE	Brass body: ≤ 3 mm Stainless steel AISI series 300, > 3 mm Low lead brass AISI 316 body: AISI 316 PPS body: PPS for V sealing, Stainless Steel for R sealing
ARMATURE TUBE	Stainless steel AISI series 300
FIXED CORE	Stainless steel AISI series 400
PLUNGER	Stainless steel AISI series 400
PHASE DISPLACEMENT RING	Copper (Cu 99,9%) or Gold plated copper
SPRING	Stainless steel AISI series 300
SEALING*	V=FKM*, E=EPDM, R=RUBY Flange sealing are made of VMQ

- V = FKM+EPDM for valves with PPS body and PUSH IN connections.

- **CE**
  - 2014/35/EU (LVD)
  - 2014/30/EU (EMC)
  - 2014/68/EU (PED)

  art. 4.3 up to 1"

- **UL** regognized and **VDE** approved coils are available for this series, please refer to coil section.

- **NSF/ANSI 169** certification (Special Food Equipment and Devices) is available for this series, Valves with NSF approval are in compliance with CE regulation 1935/2004. List of certified product codes available in the following tables.

- The fluids listed in the "technical data" tables should be considered as a recommendation. Please check the chemical compatibility of the fluids with the materials of the valve at RFQ stage.
- G type thread in accordance with ISO 228/1.
- For spare parts list please refer to the dedicated chapter.

Please read and agree our GENERAL CONDITIONS before placing an order. All the information are exclusive ownership of ODE S.r.l. All rights reserved ©ODE S.r.l.

3/2 NC, PUSH IN, FKM

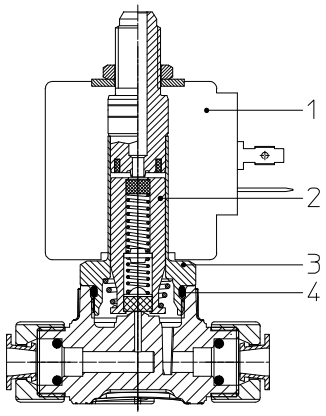

3/2 NC, BRASS, FKM

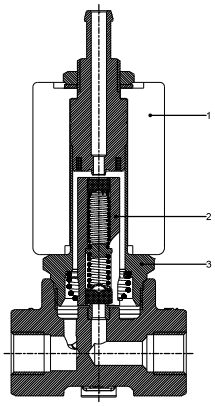

3/2 NC, PPS, RUBY

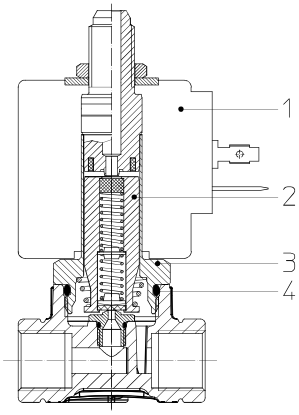

DRAWING 1

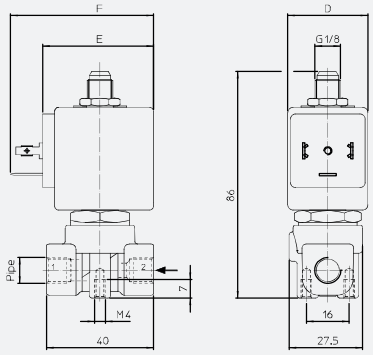

DRAWING 2

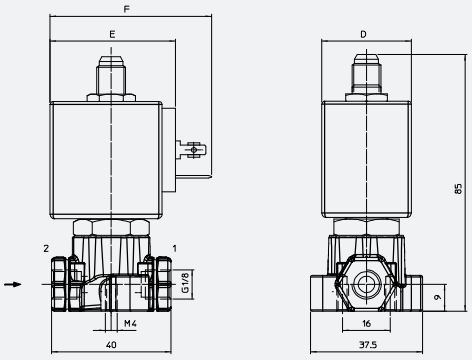

DRAWING 3

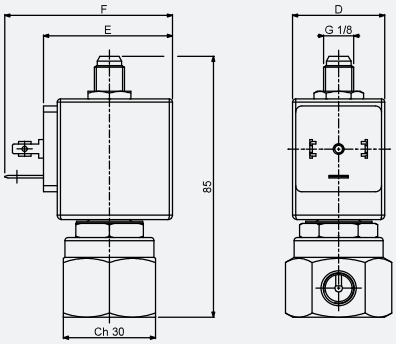

DRAWING 4

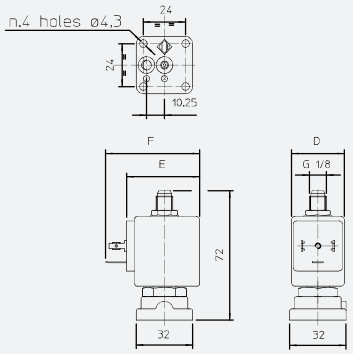

DRAWING 5

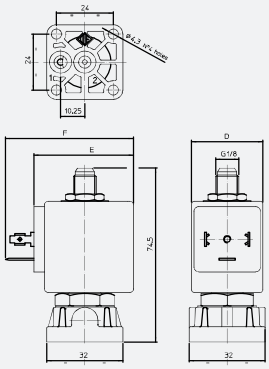

DRAWING 6

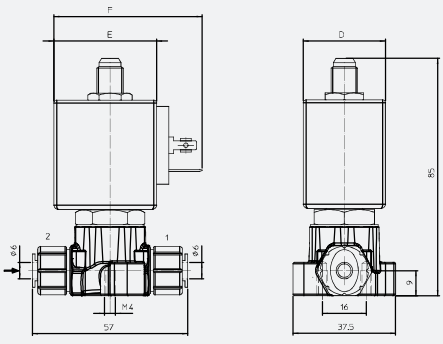

DRAWING 7

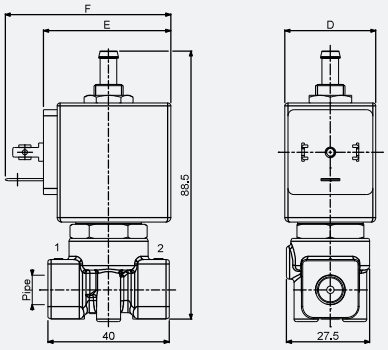

DRAWING 8

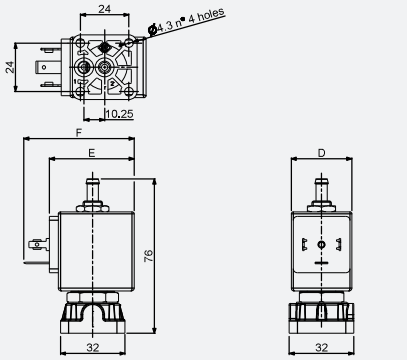

DRAWING 9

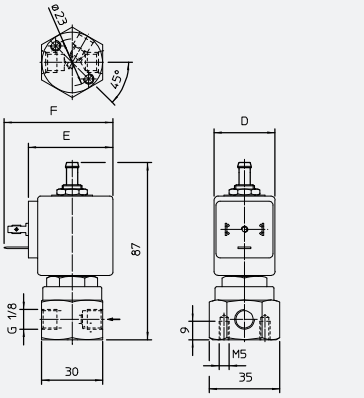

DRAWING 10

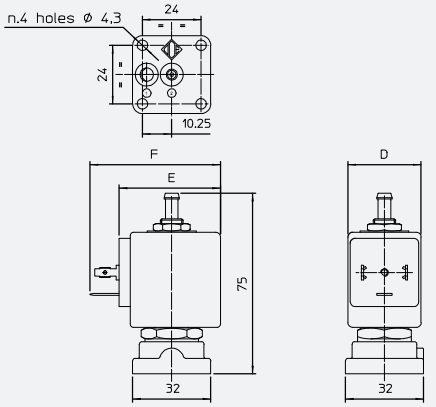

DRAWING 11

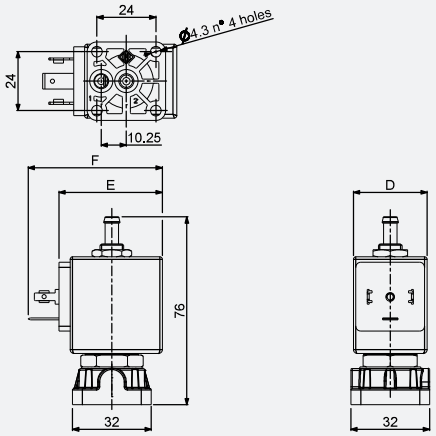

DRAWING 12

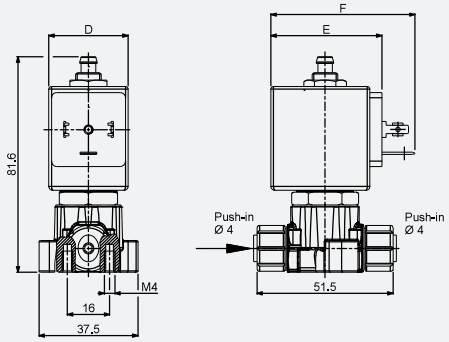

DIMENSIONS [mm]		
D	E	F
30	42	54

PIPE	ORIFICE SIZE [mm]	Kv [l/min]	COIL SERIES	PRESSURE [bar]				CODE			DRAWING REF.
				MIN.	MOPD		PS	BRASS	STAINLESS STEEL	PPS	
					AC	DC					
G1/8	1	0,45	B**08	0	20	20	40	31A31A1V10-T3	-	-	1
	1,5	1,1	B**08	0	15	15	25*	-	-	31AP1A1V15-T0	2
		1,4	B**08	0	15	15	40	31A31A1V15-T3	31L11A1V15-T4	-	1 | 3
	2	1,8	B**08	0	10	10	25*	-	-	31AP1A1V20-T0	2
		2	B**08	0	10	10	40	31A31A1V20-T3	-	-	1
	2,5	2,5	B**08	0	6	6	25*	-	-	31AP1A1V25-T0	2
		3,2	B**08	0	6	6	40	31A31A1V25-T3	-	-	1
	3	3,4	B**08	0	5	5	25*	-	-	31AP1A1V30-T0	2
		4	B**08	0	5	5	40	31A31A1V30-T3	-	-	1
	4,5	6,5	B**08	0	3	3	40	31A31A6V45-T3	-	-	1
G1/4	1	0,45	B**08	0	20	20	40	31A22A1V10-T3	-	-	1
	1,5	1,1	B**08	0	20	20	25*	-	-	31AP2A1V15-T0	2
		1,4	B**08	0	15	15	40	31A22A1V15-T3	-	-	1
	2	1,8	B**08	0	15	15	25*	-	-	31AP2A1V20-T0	2
		2	B**08	0	10	10	40	31A22A1V20-T3	-	-	1
	2,5	2,5	B**08	0	10	10	25*	-	-	31AP2A1V25-T0	2
		3,2	B**08	0	6	6	40	31A22A1V25-T3	-	-	1
	3	3,4	B**08	0	6	6	25*	-	-	31AP2A1V30-T0	2
		4	B**08	0	5	5	40	31A22A1V30-T3	-	-	1
	4,5	6,5	B**08	0	3	3	40	31A22A6V45-T3	-	-	1
FLANGE CONN.	1,5	1,4	B**08	0	15	15	25*	-	-	31APBA1V15-T0	5
			B**08	0	15	15	40	31A1BA1V15-T3	-	-	4
	2	2	B**08	0	10	10	25*	-	-	31APBA1V20-T0	5
			B**08	0	10	10	40	31A1BA1V20-T3	-	-	4
	2,5	3,2	B**08	0	6	6	25*	-	-	31APBA1V25-T0	5
			B**08	0	6	6	40	31A1BA1V25-T3	-	-	4
	3	4	B**08	0	5	5	25*	-	-	31APBA1V30-T0	5
			B**08	0	5	5	40	31A1BA1V30-T3	-	-	4
PUSH IN OD 4 mm	1,5	1,1	B**08	0	15	15	25*	-	-	31AP5A1V15-T0	6
	2	1,8	B**08	0	10	10	25*	-	-	31AP5A1V20-T0	6
	2,5	2,5	B**08	0	6	6	25*	-	-	31AP5A1V25-T0	6
	3	3,4	B**08	0	5	5	25*	-	-	31AP5A1V30-T0	6
PUSH IN OD 6 mm	1,5	1,1	B**08	0	15	15	25*	-	-	31AP6A1V15-T0	6
	2	1,8	B**08	0	10	10	25*	-	-	31AP6A1V20-T0	6
	2,5	2,5	B**08	0	6	6	25*	-	-	31AP6A1V25-T0	6
	3	3,4	B**08	0	5	5	25*	-	-	31AP6A1V30-T0	6
PUSH IN OD 8 mm	1,5	1,1	B**08	0	15	15	25*	-	-	31AP7A1V15-T0	6
	2	1,8	B**08	0	10	10	25*	-	-	31AP7A1V20-T0	6
	2,5	2,5	B**08	0	6	6	25*	-	-	31AP7A1V25-T0	6
	3	3,4	B**08	0	5	5	25*	-	-	31AP7A1V30-T0	6

- *Max allowable pressure (PS) 16 bar for domestic applications. Safety factor equal to 5*PS according to EN 60730-2-8.
- *Max allowable pressure (PS) 25 bar for industrial applications.
- 3rd way exhaust Ø2.5 mm
- For AP series: Coil nut assembly 2 Nm max, armature tube 4 Nm
- The Kv values refer to the orifice and do not take into account any reductions due to the size of the connection pipe
- For tubes: PA and PTFE tolerance max (±0,1)
- Available on request with minimum quantities. Please contact ODE before order.

PIPE	ORIFICE SIZE [mm]	Kv [l/min]	COIL SERIES	PRESSURE [bar]				CODE			DRAWING REF.
				MIN.	MOPD		PS	BRASS	STAINLESS STEEL	PPS	
					AC	DC					
G1/8	1	0,45	B**08	0	20	20	40	31A31HL1V10-T3	-	-	7
	1,5	1,1	B**08	0	15	15	25*	-	-	31AP1HL1V15-T0	8
		1,4	B**08	0	15	15	40	31A31HL1V15-T3	31L11HL1V15-T4	-	7 | 9
	2	1,8	B**08	0	10	10	25*	-	-	31AP1HL1V20-T0	8
		2	B**08	0	10	10	40	31A31HL1V20-T3	-	-	7
	2,5	2,5	B**08	0	6	6	25*	-	-	31AP1HL1V25-T0	8
		3,2	B**08	0	6	6	40	31A31HL1V25-T3	-	-	7
	3	3,4	B**08	0	5	5	25*	-	-	31AP1HL1V30-T0	8
		4	B**08	0	5	5	40	31A31HL1V30-T3	-	-	7
G1/4	1	0,45	B**08	0	20	20	40	31A22HL1V10-T3	-	-	7
	1,5	1,1	B**08	0	20	20	25*	-	-	31AP2HL1V15-T0	8
		1,4	B**08	0	15	15	40	31A22HL1V15-T3	-	-	7
	2	1,8	B**08	0	15	15	25*	-	-	31AP2HL1V20-T0	8
		2	B**08	0	10	10	40	31A22HL1V20-T3	-	-	7
	2,5	2,5	B**08	0	10	10	25*	-	-	31AP2HL1V25-T0	8
		3,2	B**08	0	6	6	40	31A22HL1V25-T3	-	-	7
	3	3,4	B**08	0	6	6	25*	-	-	31AP2HL1V30-T0	8
		4	B**08	0	5	5	40	31A22HL1V30-T3	-	-	7
FLANGE CONN.	1,5	1,4	B**08	0	15	15	25*	-	-	31APBHL1V15-T0	11
			B**08	0	15	15	40	31A1BHL1V15-T3	-	-	10
	2	2	B**08	0	10	10	25*	-	-	31APBHL1V20-T0	11
			B**08	0	10	10	40	31A1BHL1V20-T3	-	-	10
	2,5	3,2	B**08	0	6	6	25*	-	-	31APBHL1V25-T0	11
			B**08	0	6	6	40	31A1BHL1V25-T3	-	-	10
	3	4	B**08	0	5	5	25*	-	-	31APBHL1V30-T0	11
			B**08	0	5	5	40	31A1BHL1V30-T3	-	-	10
PUSH IN OD 4 mm	1,5	1,1	B**08	0	15	15	25*	-	-	31AP5HL1V15-T0	12
	2	1,8	B**08	0	10	10	25*	-	-	31AP5HL1V20-T0	12
	2,5	2,5	B**08	0	6	6	25*	-	-	31AP5HL1V25-T0	12
	3	3,4	B**08	0	5	5	25*	-	-	31AP5HL1V30-T0	12
PUSH IN OD 6 mm	1,5	1,1	B**08	0	15	15	25*	-	-	31AP6HL1V15-T0	12
	2	1,8	B**08	0	10	10	25*	-	-	31AP6HL1V20-T0	12
	2,5	2,5	B**08	0	6	6	25*	-	-	31AP6HL1V25-T0	12
	3	3,4	B**08	0	5	5	25*	-	-	31AP6HL1V30-T0	12
PUSH IN OD 8 mm	1,5	1,1	B**08	0	15	15	25*	-	-	31AP7HL1V15-T0	12
	2	1,8	B**08	0	10	10	25*	-	-	31AP7HL1V20-T0	12
	2,5	2,5	B**08	0	6	6	25*	-	-	31AP7HL1V25-T0	12
	3	3,4	B**08	0	5	5	25*	-	-	31AP7HL1V30-T0	12

- *Max allowable pressure (PS) 16 bar for domestic applications. Safety factor equal to 5*PS according to EN 60730-2-8.
- *Max allowable pressure (PS) 25 bar for industrial applications.
- 3rd way exhaust Ø2.5 mm
- For AP series: Coil nut assembly 2 Nm max, armature tube 4 Nm
- The Kv values refer to the orifice and do not take into account any reductions due to the size of the connection pipe
- For tubes: PA and PTFE tolerance max (±0,1)
- Available on request with minimum quantities. Please contact ODE before order.

PIPE	ORIFICE SIZE [mm]	Kv [l/min]	COIL SERIES	PRESSURE [bar]				CODE			DRAWING REF.
				MIN.	MOPD		PS	BRASS	STAINLESS STEEL	PPS	
					AC	DC					
G1/8	1	0,45	B**08	0	20	20	40	31A31A1R10-T3	-	-	1
	1,5	1,1	B**08	0	15	15	25*	-	-	31AP1A1R15-RPT0	2
		1,4	B**08	0	15	15	40	31A31A1R15-T3	-	-	1
	2	1,8	B**08	0	10	10	25*	-	-	31AP1A1R20-RPT0	2
		2	B**08	0	10	10	40	31A31A1R20-T3	-	-	1
	2,5	2,5	B**08	0	6	6	25*	-	-	31AP1A1R25-RPT0	2
		3,2	B**08	0	6	6	40	31A31A1R25-T3	-	-	1
	3	3,4	B**08	0	5	5	25*	-	-	31AP1A1R30-RPT0	2
		4	B**08	0	5	5	40	31A31A1R30-T3	-	-	1
G1/4	1	0,45	B**08	0	20	20	40	31A22A1R10-T3	-	-	1
	1,5	1,1	B**08	0	20	20	25*	-	-	31AP2A1R15-RPT0	2
		1,4	B**08	0	15	15	40	31A22A1R15-T3	-	-	1
	2	1,8	B**08	0	15	15	25*	-	-	31AP2A1R20-RPT0	2
		2	B**08	0	10	10	40	31A22A1R20-T3	-	-	1
	2,5	2,5	B**08	0	10	10	25*	-	-	31AP2A1R25-RPT0	2
		3,2	B**08	0	6	6	40	31A22A1R25-T3	-	-	1
	3	3,4	B**08	0	6	6	25*	-	-	31AP2A1R30-RPT0	2
		4	B**08	0	5	5	40	31A22A1R30-T3	-	-	1
FLANGE CONN.	1,5	1,4	B**08	0	15	15	25*	-	-	31APBA1R15-RPT0	2
			B**08	0	15	15	40	31A1BA1R15-T3	-	-	4
	2	2	B**08	0	10	10	25*	-	-	31APBA1R20-RPT0	5
			B**08	0	10	10	40	31A1BA1R20-T3	-	-	4
	2,5	3,2	B**08	0	6	6	25*	-	-	31APBA1R25-RPT0	5
			B**08	0	6	6	40	31A1BA1R25-T3	-	-	4
	3	4	B**08	0	5	5	25*	-	-	31APBA1R30-RPT0	5
			B**08	0	5	5	40	31A1BA1R30-T3	-	-	4
PUSH IN OD 4 mm	1,5	1,1	B**08	0	15	15	25*	-	-	31AP5A1R15-RPT0	6
	2	1,8	B**08	0	10	10	25*	-	-	31AP5A1R20-RPT0	6
	2,5	2,5	B**08	0	6	6	25*	-	-	31AP5A1R25-RPT0	6
	3	3,4	B**08	0	5	5	25*	-	-	31AP5A1R30-RPT0	6
PUSH IN OD 6 mm	1,5	1,1	B**08	0	15	15	25*	-	-	31AP6A1R15-RPT0	6
	2	1,8	B**08	0	10	10	25*	-	-	31AP6A1R20-RPT0	6
	2,5	2,5	B**08	0	6	6	25*	-	-	31AP6A1R25-RPT0	6
	3	3,4	B**08	0	5	5	25*	-	-	31AP6A1R30-RPT0	6
PUSH IN OD 8 mm	1,5	1,1	B**08	0	15	15	25*	-	-	31AP7A1R15-RPT0	6
	2	1,8	B**08	0	10	10	25*	-	-	31AP7A1R20-RPT0	6
	2,5	2,5	B**08	0	6	6	25*	-	-	31AP7A1R25-RPT0	6
	3	3,4	B**08	0	5	5	25*	-	-	31AP7A1R30-RPT0	6

- *Max allowable pressure (PS) 16 bar for domestic applications. Safety factor equal to 5*PS according to EN 60730-2-8.
- *Max allowable pressure (PS) 25 bar for industrial applications.
- 3rd way exhaust Ø2.5 mm
- The use of rigid sealings usually implies a slight leakage, limited within 300 cm3/h at a pressure equal to the MOPD
- For AP series: Coil nut assembly 2 Nm max, armature tube 4 Nm
- The Kv values refer to the orifice and do not take into account any reductions due to the size of the connection pipe
- For tubes: PA and PTFE tolerance max (±0,1)
- Available on request with minimum quantities. Please contact ODE before order.

PIPE	ORIFICE SIZE [mm]	Kv [l/min]	COIL SERIES	PRESSURE [bar]				CODE			DRAWING REF.
				MIN.	MOPD		PS	BRASS	STAINLESS STEEL	PPS	
					AC	DC					
G1/8	1	0,45	B**08	0	20	20	40	31A31HL1R10-T3	-	-	7
	1,5	1,1	B**08	0	15	15	25*	-	-	31AP1HL1R15-RPT0	8
		1,4	B**08	0	15	15	40	31A31HL1R15-T3	-	-	7
	2	1,8	B**08	0	10	10	25*	-	-	31AP1HL1R20-RPT0	8
		2	B**08	0	10	10	40	31A31HL1R20-T3	-	-	7
	2,5	2,5	B**08	0	6	6	25*	-	-	31AP1HL1R25-RPT0	8
		3,2	B**08	0	6	6	40	31A31HL1R25-T3	-	-	7
	3	3,4	B**08	0	5	5	25*	-	-	31AP1HL1R30-RPT0	8
		4	B**08	0	5	5	40	31A31HL1R30-T3	-	-	7
G1/4	1	0,45	B**08	0	20	20	40	31A22HL1R10-T3	-	-	7
	1,5	1,1	B**08	0	20	20	25*	-	-	31AP2HL1R15-RPT0	8
		1,4	B**08	0	15	15	40	31A22HL1R15-T3	-	-	7
	2	1,8	B**08	0	15	15	25*	-	-	31AP2HL1R20-RPT0	8
		2	B**08	0	10	10	40	31A22HL1R20-T3	-	-	7
	2,5	2,5	B**08	0	10	10	25*	-	-	31AP2HL1R25-RPT0	8
		3,2	B**08	0	6	6	40	31A22HL1R25-T3	-	-	7
	3	3,4	B**08	0	6	6	25*	-	-	31AP2HL1R30-RPT0	8
		4	B**08	0	5	5	40	31A22HL1R30-T3	-	-	7
FLANGE CONN.	1,5	1,4	B**08	0	15	15	25*	-	-	31APBHL1R15-RPT0	11
			B**08	0	15	15	40	31A1BHL1R15-T3	-	-	10
	2	2	B**08	0	10	10	25*	-	-	31APBHL1R20-RPT0	11
			B**08	0	10	10	40	31A1BHL1R20-T3	-	-	10
	2,5	3,2	B**08	0	6	6	25*	-	-	31APBHL1R25-RPT0	11
			B**08	0	6	6	40	31A1BHL1R25-T3	-	-	10
	3	4	B**08	0	5	5	25*	-	-	31APBHL1R30-RPT0	11
			B**08	0	5	5	40	31A1BHL1R30-T3	-	-	10
PUSH IN OD 4 mm	1,5	1,1	B**08	0	15	15	25*	-	-	31AP5HL1R15-RPT0	12
	2	1,8	B**08	0	10	10	25*	-	-	31AP5HL1R20-RPT0	12
	2,5	2,5	B**08	0	6	6	25*	-	-	31AP5HL1R25-RPT0	12
	3	3,4	B**08	0	5	5	25*	-	-	31AP5HL1R30-RPT0	12
PUSH IN OD 6 mm	1,5	1,1	B**08	0	15	15	25*	-	-	31AP6HL1R15-RPT0	12
	2	1,8	B**08	0	10	10	25*	-	-	31AP6HL1R20-RPT0	12
	2,5	2,5	B**08	0	6	6	25*	-	-	31AP6HL1R25-RPT0	12
	3	3,4	B**08	0	5	5	25*	-	-	31AP6HL1R30-RPT0	12
PUSH IN OD 8 mm	1,5	1,1	B**08	0	15	15	25*	-	-	31AP7HL1R15-RPT0	12
	2	1,8	B**08	0	10	10	25*	-	-	31AP7HL1R20-RPT0	12
	2,5	2,5	B**08	0	6	6	25*	-	-	31AP7HL1R25-RPT0	12
	3	3,4	B**08	0	5	5	25*	-	-	31AP7HL1R30-RPT0	12

- *Max allowable pressure (PS) 16 bar for domestic applications. Safety factor equal to 5*PS according to EN 60730-2-8.
- *Max allowable pressure (PS) 25 bar for industrial applications.
- 3rd way exhaust Ø2.5 mm
- The use of rigid sealings usually implies a slight leakage, limited within 300 cm3/h at a pressure equal to the MOPD
- For AP series: Coil nut assembly 2 Nm max, armature tube 4 Nm
- The Kv values refer to the orifice and do not take into account any reductions due to the size of the connection pipe
- For tubes: PA and PTFE tolerance max (±0,1)
- Available on request with minimum quantities. Please contact ODE before order.

CODIFICATION

I	II	III	IV	V	VI	VII	VIII	IX		X	XI
3	1		A	31	A	1	V	15	-		T0

I. NUMBER OF WAYS
3 - 3 - way

II. NUMBER OF ELEMENTS
1 - 1 element

III. ARMATURE TUBE MATERIAL
Blank - std. material
6 - AISI 316 (optional, valid for NC versions, brass or PPS body only)

IV. SERIES TYPE
A - brass body
L - StSt body
AL - StSt body with flange connection
AP - PPS body

V. CONNECTIONS
For A series *
31 - G1/8
22 - G1/4
For L series *
11 - G1/8
22 - G1/4
For AL series
B - flange connection
For AP series
1 - G1/8
2 - G1/4
B - flange connection
5 - PUSH IN for OD 4 mm
6 - PUSH IN for OD 6 mm
7 - PUSH IN for OD 8 mm

VI. CORE TUBE TYPE
A - for 3/2 valves exhaust G 1/8 (M)
HL - for 3/2 valves hose conn. exhaust

VII. PHASE DISP. RING MATERIAL
0 or blank - copper
1 - gold plated copper

VIII. SEALING MATERIAL
V - FKM
R - RUBY
E - EPDM

IX. ORIFICE Ø MULTIPLIED BY 10

X. OPTIONS
RP - stainless steel orifice
VO - Flange O-RINGS in FKM material and upper sealing in FKM material (only for flanged valves, with R sealing)
V - upper sealing in FKM material (only for valves with RUBY main sealing)

XI. NSF CERTIFICATION
For A series
T3 - Low lead brass body
For L, AL series
T4 - StSt body
For AP series
T0 - PPS body

■ *Push in connections can be made with additional fittings. Please contact ODE for further informations.

OPTIONS AVAILABILITY

OPTION	VALVE TYPE	BODY MATERIAL	SEALING MATERIAL	VALVE SIZE/CONNECTIONS				NOTES
				G1/8	G1/4	FLANGE CONN.	PUSH IN	
RP	3/2 NC	PPS	V, R	X	X	X	X	Ruby sealing is available only with options RP
V	3/2 NC	Brass, StSt	R	X	X	X	X	
VO	3/2 NC	Brass, StSt	R			X		