

21A-21L-21ALB-21AP -T0 -T3 -T4 SERIES

Food Grade, 2-way, Direct Acting

21A, 21L and **21AP** are direct acting solenoid valves. The fixed core and armature tube are welded together to enhance pressure resistance and leak-tightness. Valves do not require a minimum operating pressure.
AC/DC interchangeability of the coil is possible for both NC and NO configurations.



1

TECHNICAL DATA

PORT CONNECTION	G1/8, G1/4, Flange connection, PUSH-IN for OD 4, 6, 8 mm		
SEALING MATERIALS	FKM	EPDM*	RUBY
FLUID TEMPERATURE	-10°C +140°C	-10°C +140°C	-40°C +180°C
FLUIDS	Water, steam, air	Water, steam	Water, steam
VISCOSITY	12 cSt up to orifice 1.5 mm, 37 cSt for orifice 2.0 mm, 53 cSt for orifice 2.5 mm and above		
TUBE Ø - COIL WIDTH - SERIES	ø 13 mm - 30 mm	BDV08 (CLASS H)	
	ø 13 mm - 36 mm	UDV16 (CLASS H)	
	ø 13 mm - 52 mm	GDV14 (CLASS H)	
INSTALLATION	As required, preferably with actuator upright		
PROTECTION DEGREE	IP 65 EN 60529 (DIN 40050) with connector		

- * Available on request with minimum order quantity.
- MOPD values are referred to "standard power" coil range. Please refer to coil chapter.

MATERIALS

BODY	Low lead brass, stainless steel AISI 316 or PPS
ORIFICE	For Brass body: ≤ 3 mm Stainless steel AISI series 300, > 3 mm Low lead brass For AISI 316 body: AISI 316 For PPS body: PPS for FKM sealing, Stainless Steel for RUBY sealing
ARMATURE TUBE	Stainless steel AISI series 300
FIXED CORE	Stainless steel AISI series 400
PLUNGER	Stainless steel AISI series 400
PHASE DISPLACEMENT RING	Copper (Cu 99,9%) or Gold plated copper
SPRING	Stainless steel AISI series 300
SEALING*	V=FKM, E=EPDM, R=RUBY O-R flange sealing are made of VMQ

- V = FKM+EPDM for valves with PPS body and PUSH IN connections.

- **CE**
  - 2014/35/EU (LVD)
  - 2014/30/EU (EMC)
  - 2014/68/EU (PED)

  art. 4.3 up to 1"
- **UL** regognized and **VDE** approved coils are available for this series, please refer to coil section.
- **NSF/ANSI 169** certification (Special Food Equipment and Devices) is available for this series, Valves with NSF approval are in compliance with CE regulation 1935/2004. List of certified product codes available in the following tables.

- The fluids listed in the "technical data" tables should be considered as a recommendation. Please check the chemical compatibility of the fluids with the materials of the valve at RFQ stage.
- G type thread in accordance with ISO 228/1.
- For spare parts list please refer to the dedicated chapter.

Please read and agree our GENERAL CONDITIONS before placing an order. All the information are exclusive ownership of ODE S.r.l. All rights reserved ©ODE S.r.l.

2/2 NC

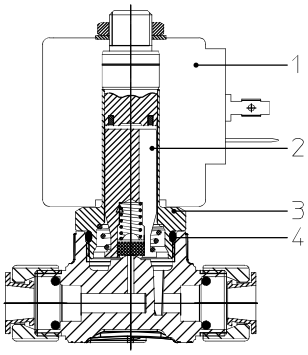

2/2 NO

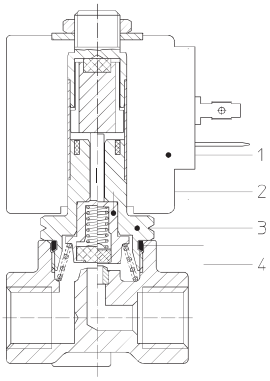

DRAWING 1

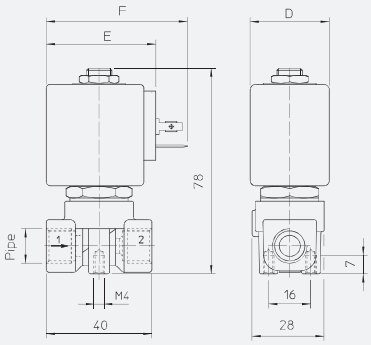

DRAWING 2

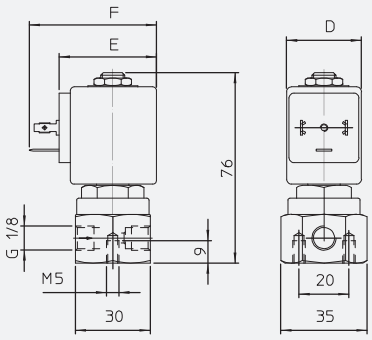

DRAWING 3

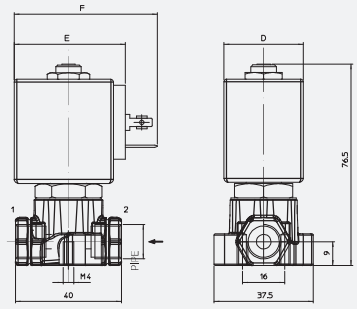

DRAWING 4

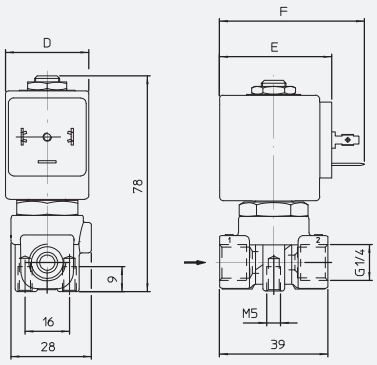

DRAWING 5

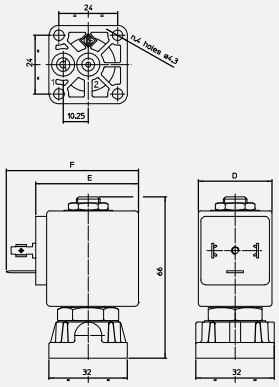

DRAWING 6

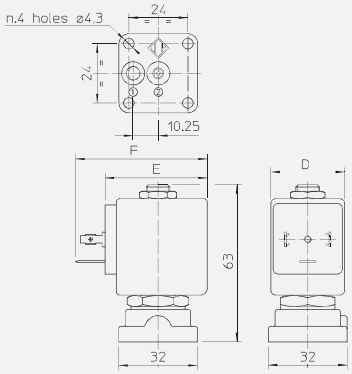

2/2 NC FKM SEALING

DRAWING 7

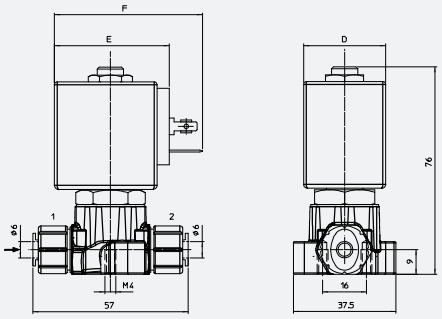

COIL SERIES	DIMENSIONS [mm]		
	D	E	F
BDV08	30	42	54
UDV16	36	48	60
GDV14	52	55	67

PIPE	ORIFICE SIZE [mm]	Kv [l/min]	COIL SERIES	PRESSURE [bar]				CODE			DRAWING REF.
				MIN.	MOPD		PS	BRASS	STAINLESS STEEL	PPS	
					AC	DC					
G1/8	1	0,45	B**08	0	35	35	40	21A31K1V10-T3	-	-	1
	1,5	1,1	B**08	0	16	16	25*	-	-	21AP1K1V15-T0	3
		1,4	B**08	0	30	18	40	21A31K1V15-T3	21L11K1V15-T4	-	1 | 2
	2	1,8	B**08	0	16	16	25*	-	-	21AP1K1V20-T0	3
		2	B**08	0	22	16	40	21A31K1V20-T3	-	-	1
	2,5	2,5	B**08	0	14	9	25*	-	-	21AP1K1V25-T0	3
			UDV16	0	16	16	25*	-	-	21AP1K1V25-T0	3
		3,2	B**08	0	14	9	40	21A31K1V25-T3	-	-	1
	3	3,4	B**08	0	10	6	25*	-	-	21AP1K1V30-T0	3
			UDV16	0	16	16	25*	-	-	21AP1K1V30-T0	3
		4	B**08	0	10	6	40	21A31K1V30-T3	21L11K1V30-T4	-	1 | 2
			UDV16	0	28	18	40	-	21L11K1V30-T4	-	2
			GDV14	0	25	20	40	-	21L11K1V30-T4	-	2
	4,5	6,5	B**08	0	5	2	40	21A31K1V45-T3	-	-	1
G1/4	1	0,45	B**08	0	35	35	40	21A22K1V10-T3	-	-	1
	1,5	1,1	B**08	0	16	16	25*	-	-	21AP2K1V15-T0	3
		1,4	B**08	0	30	18	40	21A22K1V15-T3	-	-	1
			B**08	0	35	-	40	-	21L22K1V15-T4	-	4
	2	1,8	B**08	0	16	16	25*	-	-	21AP2K1V20-T0	3
		2	B**08	0	22	16	40	21A22K1V20-T3	-	-	1
	2,5	2,5	B**08	0	14	9	25*	-	-	21AP2K1V25-T0	3
			UDV16	0	16	16	25*	-	-	21AP2K1V25-T0	3
		3,2	B**08	0	14	9	40	21A22K1V25-T3	-	-	1
	3	3,4	B**08	0	10	6	25*	-	-	21AP2K1V30-T0	3
			UDV16	0	16	16	25*	-	-	21AP2K1V30-T0	3
		4	B**08	0	10	6	40	21A22K1V30-T3	-	-	1
	4	5	B**08	0	10	2,5	40	-	21L22K1V40-T4	-	4
	4,5	6,5	B**08	0	5	2	40	21A22K1V45-T3	-	-	1
	5,5	9	B**08	0	3	1	40	21A22K1V55-T3	21L22K1V55-T4	-	1 | 4
			GDV14	0	10	5	40	-	21L22K1V55-T4	-	4
FLANGE CONN.	1,5	1,4	B**08	0	16	16	25*	-	-	21APBK1V15-T0	5
			B**08	0	30	18	40	21A1BK1V15-T3	-	-	6
	2	2	B**08	0	16	16	25*	-	-	21APBK1V20-T0	5
			B**08	0	22	16	40	21A1BK1V20-T3	-	-	6
			UDV16	0	35	30	40	21A1BK1V20-T3	-	-	6
			GDV14	0	35	30	40	21A1BK1V20-T3	-	-	6
	2,5	3,2	B**08	0	14	9	25*	-	-	21APBK1V25-T0	5
			UDV16	0	16	16	25*	-	-	21APBK1V25-T0	5
			B**08	0	14	9	40	21A1BK1V25-T3	-	-	6
			UDV16	0	30	25	40	21A1BK1V25-T3	-	-	6
	3	4	B**08	0	10	6	25*	-	-	21APBK1V30-T0	5
			UDV16	0	16	16	25*	-	-	21APBK1V30-T0	5
			B**08	0	10	6	40	21A1BK1V30-T3	-	-	6
PUSH IN OD 4 mm	1,5	1,1	B**08	0	16	16	25*	-	-	21AP5K1V15-T0	7
	2	1,8	B**08	0	16	16	25*	-	-	21AP5K1V20-T0	7
	2,5	2,5	B**08	0	14	9	25*	-	-	21AP5K1V25-T0	7
			UDV16	0	16	16	25*	-	-	21AP5K1V25-T0	7
	3	3,4	B**08	0	10	6	25*	-	-	21AP5K1V30-T0	7
			UDV16	0	16	16	25*	-	-	21AP5K1V30-T0	7
PUSH IN OD 6 mm	1,5	1,1	B**08	0	16	16	25*	-	-	21AP6K1V15-T0	7
	2	1,8	B**08	0	16	16	25*	-	-	21AP6K1V20-T0	7
	2,5	2,5	B**08	0	14	9	25*	-	-	21AP6K1V25-T0	7
			UDV16	0	16	16	25*	-	-	21AP6K1V25-T0	7
	3	3,4	B**08	0	10	6	25*	-	-	21AP6K1V30-T0	7
			UDV16	0	16	16	25*	-	-	21AP6K1V30-T0	7
PUSH IN OD 8 mm	1,5	1,1	B**08	0	16	16	25*	-	-	21AP7K1V15-T0	7
	2	1,8	B**08	0	16	16	25*	-	-	21AP7K1V20-T0	7
	2,5	2,5	B**08	0	14	9	25*	-	-	21AP7K1V25-T0	7
			UDV16	0	16	16	25*	-	-	21AP7K1V25-T0	7
	3	3,4	B**08	0	10	6	25*	-	-	21AP7K1V30-T0	7
			UDV16	0	16	16	25*	-	-	21AP7K1V30-T0	7

- *Max allowable pressure (PS) 16 bar for domestic applications. Safety factor equal to 5*PS according to EN 60730-2-8.
- *Max allowable pressure (PS) 25 bar for industrial applications.
- For AP series: Coil nut assembly 2 Nm max, armature tube 4 Nm.
- The Kv values refer to the orifice and do not take into account any reductions due to the size of the connection pipe.
- For tubes: PA and PTFE tolerance max (±0,1).
- Available on request with minimum quantities. Please contact ODE before order.

2/2 NC RUBY SEALING

PIPE	ORIFICE SIZE [mm]	Kv [l/min]	COIL SERIES	PRESSURE [bar]				CODE			DRAWING REF.
				MIN.	MOPD		PS	BRASS	STAINLESS STEEL	PPS	
					AC	DC					
G1/8	1,5	1,1	B**08	0	16	15	25*	-	-	21AP1K1R15-RPT0	3
			UDV16	0	16	16	25*	-	-	21AP1K1R15-RPT0	3
	2	1,8	B**08	0	16	9	25*	-	-	21AP1K1R20-RPT0	3
			UDV16	0	16	16	25*	-	-	21AP1K1R20-RPT0	3
	2,5	2,5	B**08	0	14	5	25*	-	-	21AP1K1R25-RPT0	3
			UDV16	0	16	16	25*	-	-	21AP1K1R25-RPT0	3
		3,2	B**08	0	14	5	40	21A31K1R25-T3	-	-	1
	3	3,4	B**08	0	8	4	25*	-	-	21AP1K1R30-RPT0	3
			UDV16	0	16	12	25*	-	-	21AP1K1R30-RPT0	3
G1/4	1,5	1,1	B**08	0	16	15	25*	-	-	21AP2K1R15-RPT0	3
			UDV16	0	16	16	25*	-	-	21AP2K1R15-RPT0	3
	2	1,8	B**08	0	16	9	25*	-	-	21AP2K1R20-RPT0	3
			UDV16	0	16	16	25*	-	-	21AP2K1R20-RPT0	3
	2,5	2,5	B**08	0	14	5	25*	-	-	21AP2K1R25-RPT0	3
			UDV16	0	16	16	25*	-	-	21AP2K1R25-RPT0	3
	3	3,4	B**08	0	8	4	25*	-	-	21AP2K1R30-RPT0	3
			UDV16	0	16	12	25*	-	-	21AP2K1R30-RPT0	3
FLANGE CONN.	1,5	1,1	B**08	0	15	15	25*	-	-	21APBK1R15-RPT0	5
	2	1,8	B**08	0	16	9	25*	-	-	21APBK1R20-RPT0	5
	2,5	3,2	B**08	0	14	5	40	21A1BK1R25-T3	-	-	6
	3	3,4	B**08	0	8	4	25*	-	-	21APBK1R30-RPT0	5

- *Max allowable pressure (PS) 16 bar for domestic applications. Safety factor equal to 5*PS according to EN 60730-2-8.
- *Max allowable pressure (PS) 25 bar for industrial applications.
- The use of rigid sealings usually implies a slight leakage, limited within 300 cm3/h at the pressure of 10 bar.
- For AP series: Coil nut assembly 2 Nm max, armature tube 4 Nm.
- Available on request with minimum quantities. Please contact ODE before order.

2/2 NC FKM SEALING IMPROVED PRESSURE RANGE

PIPE	ORIFICE SIZE [mm]	Kv [l/min]	COIL SERIES	PRESSURE [bar]				CODE			DRAWING REF.
				MIN.	MOPD		PS	BRASS	STAINLESS STEEL	PPS	
					AC	DC					
G1/8	4	5	B**08	0	8	-	40	-	21L11K1V40-WT4	-	2
	4,5	6,5	B**08	0	10	5	40	21A31K1V45-WT3	-	-	1
			UDV16	0	17	8	40	21A31K1V45-WT3	-	-	1
			GDV14	0	18	10	40	21A31K1V45-WT3	-	-	1
	5,5	9	B**08	0	7	2	40	21A31K1V55-WT3	-	-	1
			UDV16	0	10	3,5	40	21A31K1V55-WT3	-	-	1
			GDV14	0	13	7	40	21A31K1V55-WT3	-	-	1
G1/4	4,5	6,5	B**08	0	10	5	40	21A22K1V45-WT3	-	-	1
			UDV16	0	17	8	40	21A22K1V45-WT3	-	-	1
			GDV14	0	18	10	40	21A22K1V45-WT3	-	-	1
	5,5	9	B**08	0	7	2	40	21A22K1V55-WT3	21L22K1V55-WT4	-	1 | 4
			UDV16	0	10	3,5	40	21A22K1V55-WT3	21L22K1V55-WT4	-	1 | 4
			GDV14	0	13	7	40	21A22K1V55-WT3	21L22K1V55-WT4	-	1 | 4
FLANGE CONN.	4,5	6,5	B**08	0	10	5	40	21A1BK1V45-WT3	-	-	6
			UDV16	0	17	8	40	21A1BK1V45-WT3	-	-	6
			GDV14	0	18	10	40	21A1BK1V45-WT3	-	-	6

PIPE	ORIFICE SIZE [mm]	Kv [l/min]	COIL SERIES	PRESSURE [bar]				CODE			DRAWING REF.
				MIN.	MOPD		PS	BRASS	STAINLESS STEEL	PPS	
					AC	DC					
G1/8	1,5	1,1	B**08	0	16	16	25*	-	-	21AP1Z1V15D-T0	3
			UDV16	0	25	25	40	21A31Z1V15D-T3	-	-	1
G1/4	2	1,8	B**08	0	20	20	25*	-	-	21AP2Z1V20D-T0	3
		2	B**08	0	20	20	40	21A22Z1V20D-T3	-	-	1
	3	3,4	B**08	0	10	10	25*	-	-	21AP2Z1V30D-T0	3
			UDV16	0	15	15	25*	-	-	21AP2Z1V30G-T0	3
		4	B**08	0	10	10	40	21A22Z1V30D-T3	-	-	1
	4,5	6,5	B**08	0	4	4	40	21A22Z1V45D-T3	-	-	1
	5,5	9	GDV14	0	3,5	3,5	40	21A22Z1V55G-T3	-	-	1
FLANGE CONN.	1,5	1,4	B**08	0	25	25	40	21A1BZ1V15D-T3	-	-	6

- *Max allowable pressure (PS) 16 bar for domestic applications. Safety factor equal to 5*PS according to EN 60730-2-8.
- *Max allowable pressure (PS) 25 bar for industrial applications.
- For AP series: Coil nut assembly 2 Nm max, armature tube 4 Nm.
- For tubes: PA and PTFE tolerance max (±0,1).
- Valves with PPS body may require a MOQ, depending on orifice size and connections. Please contact ODE before order.

CODIFICATION

I	II	III	IV	V	VI	VII	VIII	IX	X		XI	XII
2	1		A	31	K	1	V	30		-		T3

I. NUMBER OF WAYS
2 - 2 - way

II. NUMBER OF ELEMENTS
1 - 1 element

III. ARMATURE TUBE MATERIAL
Blank - std. material
6 - AISI 316 (optional, valid for NC versions, brass or PPS body only)

IV. SERIES TYPE
A - brass body
L - StSt body
AL - StSt body with flange connection
AP - PPS body

V. CONNECTIONS
For A series *
31 - G1/8
22 - G1/4
For L series *
11 - G1/8
22 - G1/4
For AL series
B - flange connection
For AP series
1 - G1/8
2 - G1/4
B - flange connection
5 - PUSH IN for OD 4 mm
6 - PUSH IN for OD 6 mm
7 - PUSH IN for OD 8 mm

VI. CORE TUBE TYPE
K - for 2/2 NC valves
Z - for 2/2 NO valves

VII. PHASE DISP. RING MATERIAL
0 or blank - copper
1 - gold plated copper

VIII. SEALING MATERIAL
V - FKM
R - RUBY
E - EPDM

IX. ORIFICE Ø MULTIPLIED BY 10

X. COIL IDENTIFICATION
Blank - std. for NC
D - B**08 coil, only for 2/2 NO valves
G - UDV16 and GDV14 coils, only for 2/2 NO valves

XI. OPTIONS
W - variable pitch spring or double spring, improved pressure range
RP - StSt orifice

XII. NSF CERTIFICATION
For A series
T3 - Low lead brass body
For L, AL series
T4 - StSt body
For AP series
T0 - PPS body

■ *Push in connections can be made with additional fittings. Please contact ODE for further informations.

OPTIONS AVAILABILITY

OPTION	VALVE TYPE	BODY MATERIAL	SEALING MATERIAL	VALVE SIZE/CONNECTIONS				NOTES
				G1/8	G1/4	FLANGE CONN.	PUSH IN	
W	NC	Brass & StSt	V	X	X	X	X	Ref. to improved pressure range valves' table for performances
RP	NC, NO	PPS	V, R	X	X	X	X	Standard for Ruby (R) sealing

■ Please contact ODE if you wish to combine more options.