

31JN - 31JL SERIES

General purpose - 3-way - Direct Acting

31JN - 31JL Series are compact 3-way direct acting valves with 10 mm armature tube. Thanks to a wide range of flow and pressure ratings these valves can be suitable for several applications. The armature tube is made of stainless steel to ensure greater strength and durability to the valve. Available on request the version with screw manual operator.



1

TECHNICAL DATA

PORT CONNECTION	G1/8, M5, subbase	
SEALING MATERIALS	NBR	FKM
FLUID TEMPERATURE	-10°C +90°C	-10°C +140°C
FLUIDS	Air, inert gas, water	
VISCOSITY	12 cSt up to orifice 1.5 mm, 37 cSt for orifice 2.0 mm and above	
TUBE Ø - COIL WIDTH - SERIES	ø 10 mm - 22 mm	LBA05, LVA05 (class F), LBV05 (class H)
INSTALLATION	as required, preferably with actuator upright	
PROTECTION DEGREE	IP65 EN 60529 (DIN 40050) with plug connector	

MATERIALS

BODY, ORIFICE	Brass UNI EN 12165 CW617N or AISI 316
ARMATURE TUBE	Stainless steel AISI Series 300
FIXED CORE	Stainless steel AISI Series 400
PLUNGER	Stainless steel AISI Series 400
PHASE DISPLACEMENT RING	Copper (Cu 99,9%) or gold plated copper
SPRING	Stainless steel AISI Series 300
SEALING	B=NBR, V=FKM

- **CE**
  - 2014/35/EU (LVD)
  - 2014/30/EU (EMC)
  - 2014/68/EU (PED)

  art. 4.3 up to 1"
- **INDUSTRIAL OXYGEN**
  Special versions suitable for contact with industrial oxygen are available. Please refer to codification options.
- **UL** regognized and **VDE** approved coils are available for this series, please refer to coil section.
- **EXPLOSION PROOF COILS**, suitable for zone 2-22 are available for this series. Please refer to ATEX coil section for further details.

Please read and agree our GENERAL CONDITIONS before placing an order. All the information are exclusive ownership of ODE S.r.l. All rights reserved ©ODE S.r.l.

- The fluids listed in the "technical data" tables should be considered as a recommendation. Please check the chemical compatibility of the fluids with the materials of the valve at RFQ stage.
- G type thread in accordance with ISO 228/1. M5 thread in accordance with ISO 261.
- For spare parts list please refer to the dedicated chapter.

3/2 NC BRASS WITH MANUAL OPERATOR

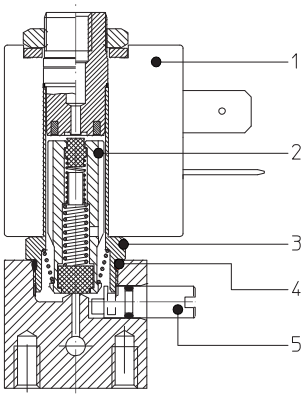

3/2 NC BRASS

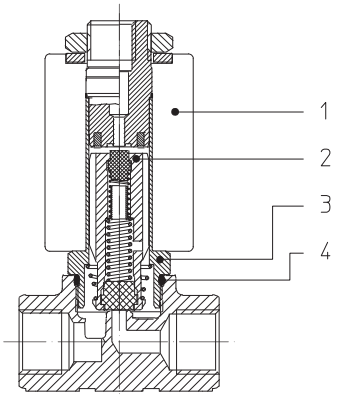

DRAWING 1

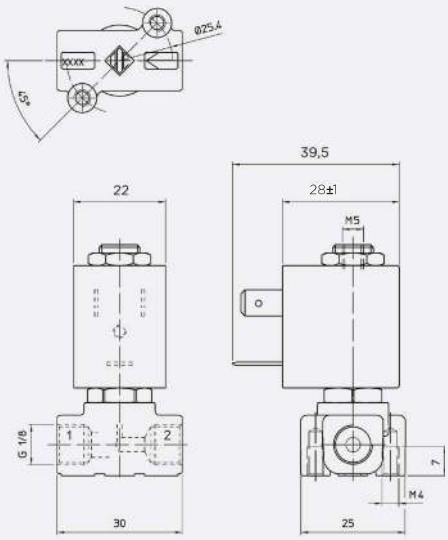

DRAWING 2

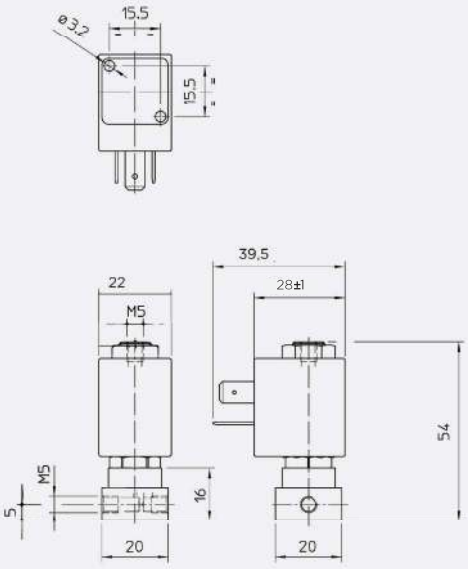

DRAWING 3

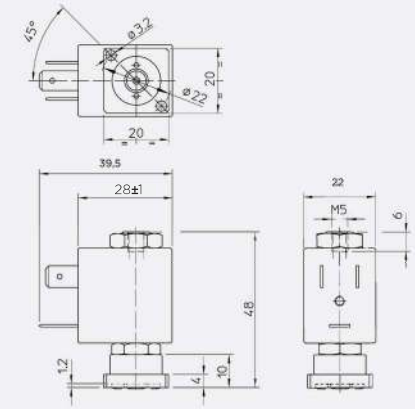

DRAWING 4

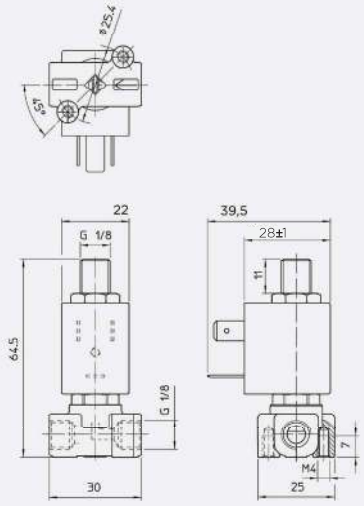

DRAWING 5

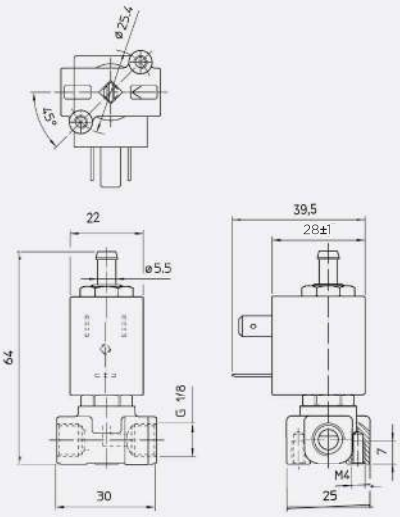

DRAWING 6

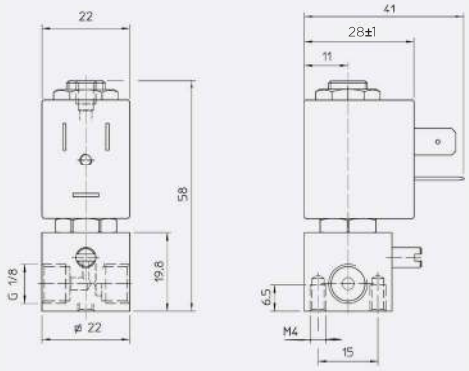

3/2 NC M5 EXHAUST

PIPE	ORIFICE SIZE Ø [mm]	Kv [l/min]	COIL SERIES	PRESSURE [bar] MIN	MOPD AC	MOPD DC	PS	CODE BRASS	CODE STAINLESS STEEL	DRAWING REFERENCE
G1/8	1,2	0,65	L**05	0	15	15	40	31JN1W0V12	-	1
	1,5	1	L**05	0	10	10	40	31JN1W0V15	-	1
	2	1,7	L**05	0	8	8	40	31JN1W0V20	-	1
	2,3	2,4	L**05	0	5	5	40	31JN1W0V23	-	1
M5	1,2	0,65	L**05	0	15	15	40	31JBMW0V12	-	2
Subbase	1,2	0,65	L**05	0	15	15	40	31JKBW0V12	-	3
	2,3	2,4	L**05	0	5	5	40	31JKBW0V23	-	3

- 3rd way exhaust Ø 1,5 mm for all orifice sizes.

3/2 NC G1/8 EXHAUST

PIPE	ORIFICE SIZE Ø [mm]	Kv [l/min]	COIL SERIES	PRESSURE [bar] MIN	MOPD AC	MOPD DC	PS	CODE BRASS	CODE STAINLESS STEEL	DRAWING REFERENCE
G1/8	1,2	0,65	L**05	0	15	-	40	31JN1X0V12	-	4
		0,6	L**05	0	15	15	40	31JN1X0V12-S	-	4
	2,3	2,4	L**05	0	5	-	40	31JN1X0V23	-	4
		1,9	L**05	0	-	5	40	31JN1X0V23-S	-	4

- 3rd way exhaust Ø 1,7 mm for all orifice sizes.

3/2 NC HOSE CONNECTION EXHAUST

PIPE	ORIFICE SIZE Ø [mm]	Kv [l/min]	COIL SERIES	PRESSURE [bar] MIN	MOPD AC	MOPD DC	PS	CODE BRASS	CODE STAINLESS STEEL	DRAWING REFERENCE
G1/8	1,2	0,65	L**05	0	15	-	40	31JN1XPV12	31JL1XP1V12	5
		0,6	L**05	0	15	15	40	31JN1XPV12-S	31JL1XP1V12-S	5
	2	1,7	L**05	0	8	-	40	31JN1XPV20	-	5
		1,4	L**05	0	-	8	40	-	31JL1XP1V20-S	5
	2,3	2,4	L**05	0	5	-	40	31JN1XPV23	-	5
		1,9	L**05	0	5	5	40	31JN1XPV23-S	-	5

- 3rd way exhaust Ø 1,7 mm for all orifice sizes.

- For sealing different from FKM, replace the letter "V" with the ones corresponding to the other materials.
  Brass Body: V= FKM, B=NBR
  Stainless Steel Body: V=FKM

3/2 NC M5 EXHAUST MANUAL OPERATOR

PIPE	ORIFICE SIZE Ø [mm]	Kv [l/min]	COIL SERIES	PRESSURE [bar] MIN	MOPD AC	MOPD DC	PS	CODE BRASS	CODE STAINLESS STEEL	DRAWING REFERENCE
G1/8	1,2	0,6	L**05	0	15	15	40	31JR1W0V12-M	-	6
	1,5	1	L**05	0	10	10	40	31JR1W0V15-M	-	6
	2,5	1,78	L**05	0	5	5	40	31JR1W0V25-M	-	6

- 3rd way exhaust Ø 1,5 mm for all orifice sizes

3/2 NO M5 EXHAUST

PIPE	ORIFICE SIZE Ø [mm]	Kv [l/min]	COIL SERIES	PRESSURE [bar] MIN	MOPD AC	MOPD DC	PS	CODE BRASS	CODE STAINLESS STEEL	DRAWING REFERENCE
G1/8	1,2	0,65	L**05	0	15	15	40	31JN1Y0V12-Z	-	1

- 3rd way exhaust Ø 1,2 mm for all orifice sizes

3/2 NO M5 EXHAUST MANUAL OPERATOR

PIPE	ORIFICE SIZE Ø [mm]	Kv [l/min]	COIL SERIES	PRESSURE [bar] MIN	MOPD AC	MOPD DC	PS	CODE BRASS	CODE STAINLESS STEEL	DRAWING REFERENCE
G1/8	1,2	0,75	L**05	0	10	7	40	31JR1Y0V12-ZM	-	6
	1,5	0,75	L**05	0	6,5	6,5	40	31JR1W0V15-ZM	-	6

- 3rd way exhaust Ø 1,2 mm for valve 31JR1Y0V12-ZM.
- 3rd way exhaust Ø 1,5 mm for valve 31JR1W0V15-ZM.

3/2 U M5 EXHAUST

PIPE	ORIFICE SIZE Ø [mm]	Kv [l/min]	COIL SERIES	PRESSURE [bar] MIN	MOPD AC	MOPD DC	PS	CODE BRASS	CODE STAINLESS STEEL	DRAWING REFERENCE
G1/8	1,2	0,65	L**05	0	6	6	40	31JN1W0V12-U	-	1
	2,3	2,4	L**05	0	2	1	40	31JN1W0V23-U	-	1
M5	1,2	0,65	L**05	0	6	6	40	31JBMW0V12-U	-	2

- 3rd way exhaust Ø 1,5 mm for all orifice sizes.

CODIFICATION

I	II	III	IV	V	VI	VII	VIII		IX
3	1		JN1	W	0	V	12	-	

I. NUMBER OF WAYS
3 - 2-way

II. NUMBER OF ELEMENTS
1 - 1 element

III. ARMATURE TUBE MATERIAL
Blank - std. material
6 - AISI 316 (optional, valid for NC versions, brass body only)

IV. SERIES AND CONNECTIONS
JN1 - brass body G1/8 (F)
JR1 - square brass body G1/8 (F)
JL1 - StSt body G1/8 (F)
JBM - brass body M5 (F)
JKB - brass body subbase

V. CORE TUBE TYPE
W - for 3/2 valve, M5 (F), exhaust Ø 1,5 mm
X - for 3/2 valve, G1/8 (M), exhaust Ø 1,7 mm
XP - for 3/2 valve, hose connection, exhaust Ø 1,7 mm
Y - for 3/2 valve, M5 (F), exhaust Ø 1,2 mm

VI. PHASE DISP. RING MATERIAL
0 - copper
1 - gold plated copper

VII. SEALING MATERIAL
V - FKM
B - NBR

VIII. ORIFICE Ø [mm] MULTIPLIED BY 10

IX. OPTIONS
M - manual operator, screw type
OX - degreasing for industrial oxygen use
Z - normally open
U - universal
ZM - normally open with manual operator, screw type

OPTIONS AVAILABILITY

OPTION	VALVE TYPE	BODY MATERIAL	SEALING MATERIAL	VALVE SIZE/CONNECTIONS G1/8	VALVE SIZE/CONNECTIONS M5	VALVE SIZE/CONNECTIONS SUBBASE	NOTES
M	3/2 NC	Brass	B, V	X			Only for JR series
OX	3/2 NC, NO, U	Brass, StSt	V	X	X	X	PS & MOPD limited to 25 bar. Shall not be used as safety valves
Z	3/2 NO	Brass	B, V	X			Ref. to 3/2 NO table for performances
U	3/2 U	Brass	B, V	X	X		Ref. to 3/2 U table for performances
ZM	3/2 NO	Brass	B, V	X			Only for JR series. Ref. to 3/2 NO table for performances

- For sealing different from FKM, replace the letter "V" with the ones corresponding to the other materials.
  Brass Body: V= FKM, B=NBR
  Stainless Steel Body: V=FKM
- Please contact ODE if you wish to combine more options.