

31A - 31L - 31ALB SERIES

General purpose - 3-way - Direct Acting

31A and **31L** are direct acting solenoid valves. The fixed core and armature tube are welded together to enhance pressure resistance and leak-tightness. Valves do not require a minimum operating pressure. A large selection of seal materials provides wide chemical compatibility. AC/DC interchangeability of the coil is possible for both NC and NO configurations.



TECHNICAL DATA

PORT CONNECTION	G 1/4 ÷ G 1/8, FLANGE CONNE CTION		
SEALING MATERIALS	soft		hard
	NBR	FKM	RUBY
FLUID TEMPERATURE	-10°C +90°C	-10°C +140°C	-40°C +180°C
FLUIDS	Air, water	oils, gasoline, diesel	Steam, water, mineral oils, gas oil, fuel oils
VISCOSITY	12 cSt up to orifice 1.5 mm, 37 cSt for orifice 2.0 mm, 53 cSt for orifice 2.5 mm and above		
TUBE Ø - COIL WIDTH - SERIES	ø 13 mm - 30 mm		BDA08, BVA08 (class F), BDV08 (class H)
INSTALLATION	as required, preferably with actuator upright		
PROTECTION DEGREE	IP65 EN 60529 (DIN 40050)		

MATERIALS

BODY	Brass UNI EN 12165 CW617N or stainless steel AISI 316
ORIFICE*	Stainless steel AISI Series 300
ARMATURE TUBE	Stainless steel AISI Series 300
FIXED CORE	Stainless steel AISI Series 400
PLUNGER	Stainless steel AISI Series 400
PHASE DISPLACEMENT RING	Copper (Cu 99,9%) or gold plated copper
SPRING	Stainless steel AISI Series 300
SEALING	B=NBR, V=FKM, R=RUBY. Flange sealing are made of VMQ

- Orifice for valves with AISI 316 body is in AISI 316 material.

- **CE**
  - 2014/35/EU (LVD)
  - 2014/30/EU (EMC)
  - 2014/68/EU (PED)

  art. 4.3 up to 1"
- **INDUSTRIAL OXYGEN**
  Special versions suitable for contact with industrial oxygen are available. Please refer to codification options.
- **UL** regognized and **VDE**
  approved coils are available for this series, please refer to coil section.
- **EXPLOSION PROOF COILS**
  suitable for zone 2-22 are available for this series. Please refer to ATEX coil section for further details.

Please read and agree our GENERAL CONDITIONS before placing an order. All the information are exclusive ownership of ODE S.r.l. All rights reserved ©ODE S.r.l.

- The fluids listed in the "technical data" tables should be considered as a recommendation. Please check the chemical compatibility of the fluids with the materials of the valve at RFQ stage.
- G type thread in accordance with ISO 228/1.
- For spare parts list please refer to the dedicated chapter.

3/2 U, BRASS

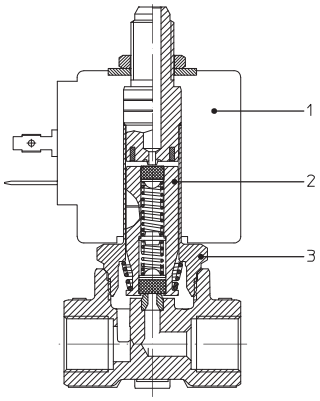

3/2 NC, BRASS, RUBY

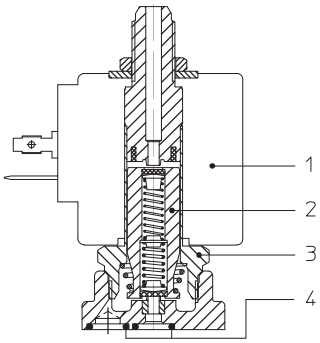

3/2 NC, BRASS, FKM

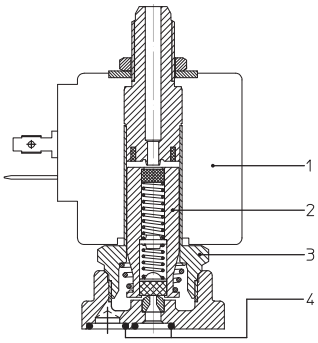

DRAWING 1

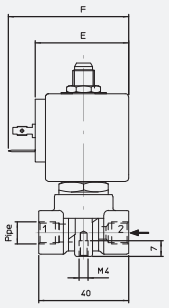

PIPE	DIMENSIONS [mm]		
	D	E	F
G1/8	30	42	54
G1/4			
FLANGE CONN.			

DRAWING 2

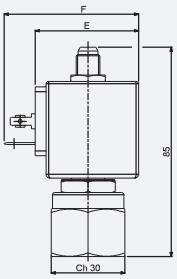

DRAWING 3

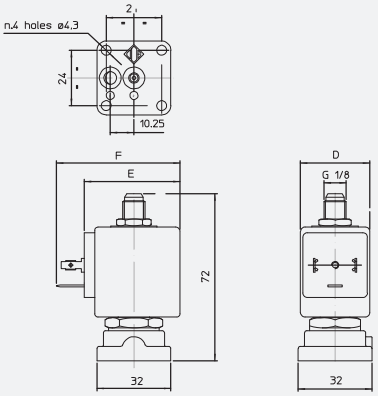

DRAWING 4

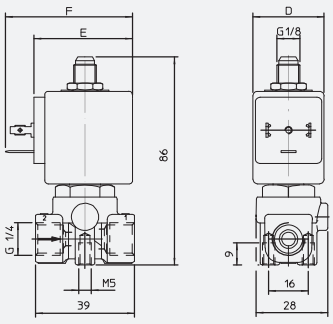

3/2 NC

PIPE	ORIFICE SIZE	Kv	COIL SERIES	PRESSURE [bar]				CODE		DRAWING REFERENCE
				MIN	MOPD		PS	BRASS	STAINLESS STEEL	
	Ø [mm]	[l/min]			AC	DC				
G1/8	1,0	0,45	B**08	0	20	20	40	31A3AV10	-	1
	1,5	1,4	B**08	0	15	15	40	31A3AV15	-	1
								-	31L1A1V15	2
	2,0	2	B**08	0	10	10	40	31A3AV20	-	1
								-	31L1A1V20	2
	2,5	3,2	B**08	0	6	6	40	31A3AV25	-	1
								-	31L1AV25	2
	3,0	4	B**08	0	5	5	40	31A3AV30	-	1
								-	31L1A1V30	2
G1/4	1,0	0,45	B**08	0	20	20	40	31A2AV10	-	1
								-	31L2A1V10	4
	1,5	1,4	B**08	0	15	15	40	31A2AV15	-	1
								-	31L2A1V15	4
	2,0	2	B**08	0	10	10	40	31A2AV20	-	1
								-	31L2AV20	4
	2,5	3,2	B**08	0	6	6	40	31A2AV25	-	1
								-	31L2A1V25	4
	3,0	4	B**08	0	5	5	40	31A2AV30	-	1
								-	31L2A1V30	4
FLANGE CONN.	1,0	0,45	B**08	0	20	20	40	31A1AV10	-	3
	1,5	1,4	B**08	0	15	15	40	31A1AV15	31ALBA1V15	3
	2,0	2	B**08	0	10	10	40	31A1AV20	31ALBA1V20	3
	2,5	3,2	B**08	0	6	6	40	31A1AV25	31ALBA1V25	3
	3,0	4	B**08	0	5	5	40	31A1AV30	31ALBA1V30	3

- 3rd way exhaust Ø 2,5 mm for all orifice sizes.
- For sealing different from FKM, replace the letter "V" with the ones corresponding to the other materials.
  Brass Body: V= FKM, B=NBR, R=RUBY
  Stainless Steel Body: V= FKM
- The use of rigid sealings usually implies a slight leakage, limited within 300 cc/h of air at the pressure equal to the MOPD.

3/2 NO

PIPE	ORIFICE SIZE	Kv	COIL SERIES	PRESSURE [bar]				CODE		DRAWING REFERENCE
				MIN	MOPD		PS	BRASS	STAINLESS STEEL	
	Ø [mm]	[l/min]			AC	DC				
G1/8	1,5	1,4	B**08	0	15	13	40	31A3FV15-Z	-	1
	2,0	2	B**08	0	15	13	40	31A3FV20-Z	-	1
G1/4	1,5	1,4	B**08	0	15	13	40	31A2FV15-Z	-	1
	2,0	2	B**08	0	15	13	40	31A2FV20-Z	-	1
FLANGE CONN.	1,5	1,4	B**08	0	15	13	40	31A1FV15-Z	-	3
	2,0	2	B**08	0	15	13	40	31A1FV20-Z	-	3

- 3rd way exhaust Ø 1,5 mm for all orifice sizes.
- For sealing different from FKM, replace the letter "V" with the ones corresponding to the other materials.
  Brass Body: V= FKM, B=NBR

3/2 U

PIPE	ORIFICE SIZE Ø [mm]	Kv [l/min]	COIL SERIES	PRESSURE [bar] MIN	MOPD AC	MOPD DC	PS	CODE BRASS	CODE STAINLESS STEEL	DRAWING REFERENCE
G1/8	1,0	0,8	B**08	0	18	18	40	31A3GV10-U	-	1
	1,5	1,4	B**08	0	10	10	40	31A3FV15-U	-	1
	2,5	3,2	B**08	0	4	4	40	31A3AV25-U	-	1
	3,0	4	B**08	0	3,5	3,5	40	31A3EV30-U	-	1
G1/4	1,0	0,8	B**08	0	18	18	40	31A2GV10-U	31L2G1V10-U	1 (BRASS), 4 (STST)
	1,5	1,4	B**08	0	10	10	40	31A2FV15-U	31L2F1V15-U	1 (BRASS), 4 (STST)
	2,5	3,2	B**08	0	4	4	40	31A2AV25-U	31L2A1V15-U	1 (BRASS), 4 (STST)
	3,0	4	B**08	0	3,5	3,5	40	31A2EV30-U	-	1
FLANGE CONN.	1,0	0,8	B**08	0	18	18	40	31A1GV10-U	-	3
	1,5	1,4	B**08	0	10	10	40	31A1FV15-U	-	3
	2,5	3,2	B**08	0	4	4	40	31A1AV25-U	-	3
	3,0	4	B**08	0	3,5	3,5	40	31A1EV30-U	-	3

- 3rd way exhaust:
  31A_GV Ø 1 mm
  31A_FV Ø 1,5 mm
  31A_AV Ø 2,5 mm
  31A_EV Ø 3 mm
- For sealing different from FKM, replace the letter "V" with the ones corresponding to the other materials.
  Brass Body: V= FKM, B=NBR
  Stainless Steel Body: V= FKM

CODIFICATION

I	II	III	IV	V	VI	VII	VIII	IX	X
3	1		A	2	A		V	20	-

I. NUMBER OF WAYS
3 - 3-way

II. NUMBER OF ELEMENTS
1 - 1 element

III. ARMATURE TUBE MATERIAL
Blank - std. material
6 - AISI 316 (optional, brass body only)

IV. SERIES
A - brass body, Ø13 mm core tube
L - StSt body, Ø13 mm core tube
AL - StSt body, flange conn., Ø13 mm core tube

V. CONNECTIONS
for A series
1 - flange connection
3 - G1/8
2 - G1/4
for L series
1 - G1/8
2 - G1/4
for AL series
B - flange connection

VI. CORE TUBE TYPE
G - 3-way, B** coil, exhaust Ø 1,0 mm
F - 3-way, B** coil, exhaust Ø 1,5 mm
A - 3-way, B** coil, exhaust Ø 2,5 mm
E - 3-way, B** coil, exhaust Ø 3,0 mm

VII. PHASE DISP. RING MATERIAL
0 - copper
1 - gold plated copper

VIII. SEALING MATERIAL
V - FKM
B - NBR
R - RUBY

IX. ORIFICE Ø [mm] MULTIPLIED BY 10

X. OPTIONS
U - Universal version
Z - NO version
M - manual operator (screw type)
UM - Universal with manual operator
ORV - Flange O-RINGS in FKM materia (only for flanged valves)
VORV - Flange O-RINGS in FKM material and upper sealing in FKM material (only for flanged valves, with R sealing)
OX - degreasing for industrial oxygen use
N - nickel plated brass body
V - upper sealing in FKM material (only for valves with RUBY main sealing)

OPTIONS AVAILABILITY

OPTION	BODY MATERIAL	SEALING MATERIAL	VALVE SIZE/CONNECTIONS G1/8	G1/4	FLANGE CONN.	NOTES
U	Brass	V, B	X	X	X	Ref. to 3/2 U table for performances
Z	Brass	V, B	X	X	X	Ref. to 3/2 NO table for performances
M	Brass & StSt	V, B	X	X		
UM	Brass	V, B	X	X	X	Ref. to 3/2 U table for performances
ORV	Brass & StSt	V, R			X	
VORV	Brass & StSt	V, R			X	
OX	Brass & StSt	V	X	X		PS & MOPD limited to 25 bar. Shall not be used as safety valves
N	Brass	V, B, R	X	X	X	
V	Brass & StSt	R	X	X	X	

- Please contact ODE if you wish to combine more options.