

21JN - 21JL SERIES

General purpose - 2-way - direct acting

21JN - 21JL Series are compact 2-way direct acting valves with 10 mm armature tube. Thanks to a wide range of flow and pressure ratings these valves can be suitable for several applications. The armature tube is made of stainless steel to ensure greater strength and durability to the valve. Available on request the version with screw manual operator.

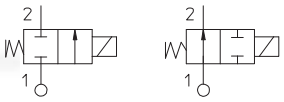

1

TECHNICAL DATA

PORT CONNECTION	G1/8, M5, flange connection	
SEALING MATERIALS	NBR	FKM
FLUID TEMPERATURE	-10°C +90°C	-10°C +140°C
FLUIDS	Air, inert gas, water	
VISCOSITY	12 cSt up to orifice 1.5 mm, 37 cSt for orifice 2.0 mm and above	
TUBE Ø - COIL WIDTH - SERIES	ø 10 mm - 22 mm	LB*2X (class F)
		LBA05, LTA05 (class F), LBV05 (class H)
		LBV08 (class H), ED 50%
INSTALLATION	as required, preferably with actuator upright	
PROTECTION DEGREE	IP65 EN 60529 (DIN 40050) with plug connector	

MATERIALS

BODY, ORIFICE	Brass UNI EN 12165 CW617N or AISI 316
ARMATURE TUBE	Stainless steel AISI Series 300
FIXED CORE	Stainless steel AISI Series 400
PLUNGER	Stainless steel AISI Series 400
PHASE DISPLACEMENT RING	Copper (Cu 99,9%) or gold plated copper
SPRING	Stainless steel AISI Series 300
SEALING	B=NBR, V=FKM

- **CE**
  - 2014/35/EU (LVD)
  - 2014/30/EU (EMC)
  - 2014/68/EU (PED)

  art. 4.3 up to 1"
- **INDUSTRIAL OXYGEN**
  Special versions suitable for contact with industrial oxygen are available. Please refer to codification options.
- **UL** regognized and **VDE** approved coils are available for this series, please refer to coil section.
- **EXPLOSION PROOF COILS**, suitable for zone 2-22 are available for this series. Please refer to ATEX coil section for further details.

Please read and agree our GENERAL CONDITIONS before placing an order. All the information are exclusive ownership of ODE S.r.l. All rights reserved ©ODE S.r.l.

- The fluids listed in the "technical data" tables should be considered as a recommendation. Please check the chemical compatibility of the fluids with the materials of the valve at RFQ stage.
- G type thread in accordance with ISO 228/1. M5 thread in accordance with ISO 261.
- For spare parts list please refer to the dedicated chapter.

NC, G1/8

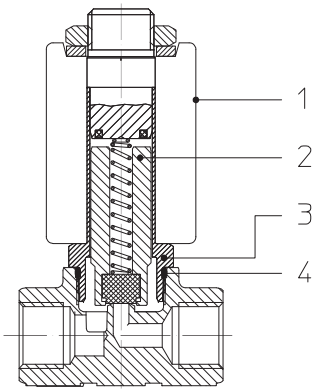

NO, G1/8

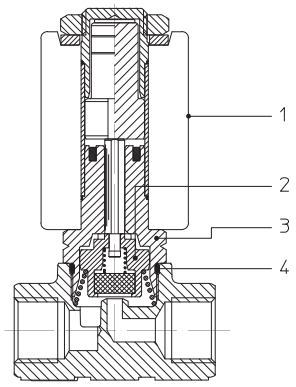

DRAWING 1

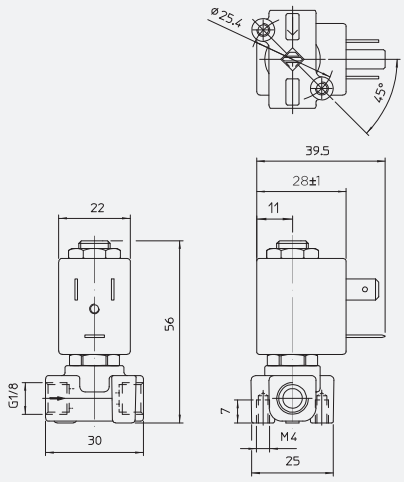

DRAWING 2

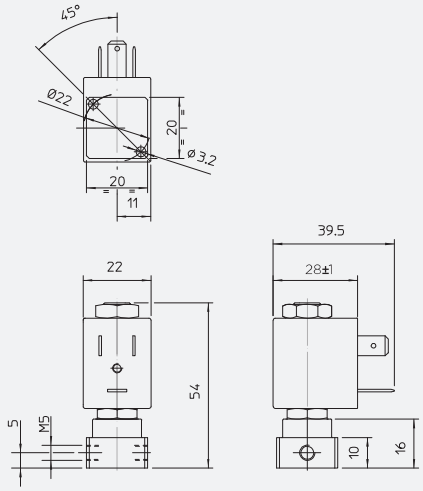

DRAWING 3

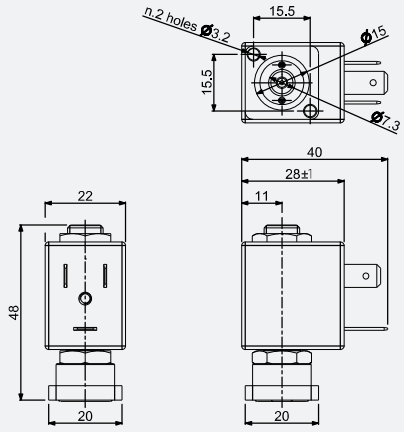

DRAWING 4

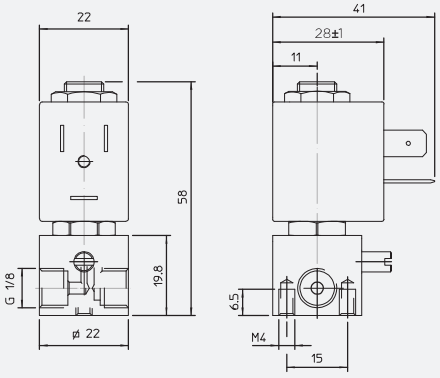

2/2 NC

PIPE	ORIFICE SIZE Ø [mm]	Kv [l/min]	COIL SERIES	PRESSURE [bar] MIN	MOPD AC	MOPD DC	PS	CODE BRASS	CODE STAINLESS STEEL	DRAWING REFERENCE
G1/8	1,2	0,7	LB*2X	0	20	3,5	40	21JN1R0V12	21JL1R1V12	1
			L**05	0	25	12	40	21JN1R0V12	21JL1R1V12	1
	1,5	1,1	L**05	0	23	10	40	21JN1R0V15	-	1
			LBV08	0	-	18	40	21JN1R0V15	-	1
	2,0	1,8	L**05	0	22	8	40	21JN1R0V20	-	1
			LBV08	0	-	8	40	21JN1R0V20	-	1
	2,3	2,3	LB*2X	0	6	-	40	21JN1R0V23	21JL1R1V23	1
			L**05	0	18	8	40	21JN1R0V23	21JL1R1V23	1
M5	1,0	0,6	L**05	0	26	12	40	21JBMR0V10	-	2
	2,0	1,8	L**05	0	22	10	40	21JBMR0V20	-	2
FLANGE CONN.	1,2	0,7	L**05	0	25	12	40	21JKBR0V12	-	3
	2,3	2,3	L**05	0	18	8	40	21JKBR0V23	-	3

- For sealing different from FKM replace the letter "V" with the ones corresponding to the other materials
  Brass Body: V=FKM, B = NBR
  Stainless Steel Body: V=FKM
- LBV08 coil has ED50%. Please refer to coil chapter for further details.

2/2 NC WITH MANUAL OPERATOR

PIPE	ORIFICE SIZE Ø [mm]	Kv [l/min]	COIL SERIES	PRESSURE [bar] MIN	MOPD AC	MOPD DC	PS	CODE BRASS	CODE STAINLESS STEEL	DRAWING REFERENCE
G1/8	1,2	0,7	L**05	0	25	12	40	21JR1R0V12-M	-	4
			L**05	0	-	4	40	21JR1R0V25-M	-	4

- For sealing different from FKM replace the letter "V" with the ones corresponding to the other materials
  Brass Body: V=FKM, B = NBR

2/2 NO

PIPE	ORIFICE SIZE Ø [mm]	Kv [l/min]	COIL SERIES	PRESSURE [bar] MIN	MOPD AC	MOPD DC	PS	CODE BRASS	CODE STAINLESS STEEL	DRAWING REFERENCE
G1/8	1,2	0,7	L**05	0	23	17	40	21JN1I0V12	21JL1I0V12	1
	2,3	2,3	L**05	0	6	5	40	21JN1I0V12	21JL1I0V12	1
FLANGE CONN.	1,2	0,7	L**05	0	23	17	40	21JKBI0V12	-	3
	2,3	2,3	L**05	0	6	5	40	21JKBI0V12	-	3

- For sealing different from FKM replace the letter "V" with the ones corresponding to the other materials
  Brass Body: V=FKM, B = NBR
  Stainless Steel Body: V=FKM

CODIFICATION

I	II	III	IV	V	VI	VII	VIII		IX
2	1		JN1	R	0	V	12	-	

I. NUMBER OF WAYS
2 - 2 - way

II. NUMBER OF ELEMENTS
1 - 1 element

III. ARMATURE TUBE MATERIAL
Blank - std
6 - AISI 316 (optional, valid for NC versions, brass body only)

IV. SERIES AND CONNECTIONS
JN1 - brass body G1/8 (F)
JR1 - square brass body G1/8 (F)
JL1 - StSt body G1/8 (F)
JBM - brass body M5 (F)
JKB - brass body subbase

V. CORE TUBE TYPE
R - for 2/2 NC valves
I - for 2/2 NO valves

VI. PHASE DISP. RING MATERIAL
0 - copper
1 - gold plated copper

VII. SEALING MATERIAL
V - FKM
B - NBR

VIII. ORIFICE Ø [mm] MULTIPLIED BY 10

IX. VERSIONS
M - manual operator, screw type
OX - degreasing for industrial oxygen use

OPTIONS AVAILABILITY

OPTION	VALVE TYPE	BODY MATERIAL	SEALING MATERIAL	VALVE SERIES				NOTES
				JN1/JL1	JR1	JBM	JKB	
M	2/2 NC	BRASS	B, V		X			ONLY FOR JR SERIES
OX	2/2 NC, NO	BRASS, STST	V	X	X	X	X	PS & MOPD limited to 25 bar. Shall not be used as safety valves

■ Please contact ODE if you wish to combine more options.