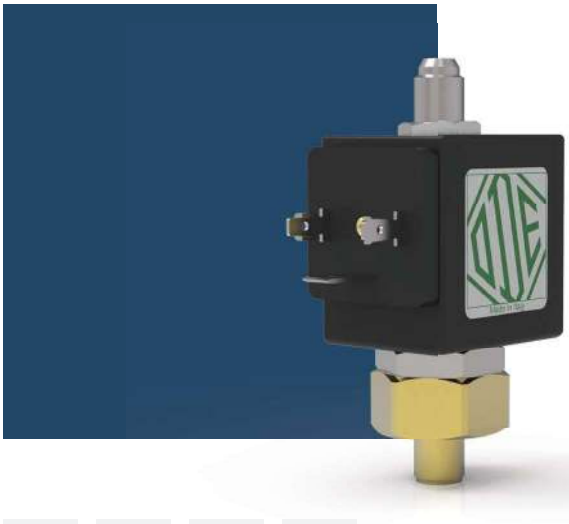

21M0 - 4144 - 5315 SERIES

General Purpose, 2-way, Direct Acting

21M0 are normally open, direct acting solenoid valves. The inline construction of inlet and outlet port ensure maximum compactness.

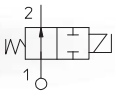

1

TECHNICAL DATA

PORT CONNECTION	G1/8 to G1/4	
SEALING MATERIALS	NBR	FKM
FLUID TEMPERATURE	-10°C +90°C	-10°C +140°C
FLUIDS	Air, inert gas, water	oils, gasoline, diesel
VISCOSITY	12 cSt up to orifice 1.5 mm, 37 cSt for orifice 2.0 mm, 53 cSt for orifice 2.5 mm and above	
TUBE Ø - COIL WIDTH - SERIES	ø 10 mm - 22 mm	LBA05, LTA05 (class F), LBV05 (class H)
	ø 13 mm - 30 mm	BDA08. BVA08 (CLASS F), BDV08 (CLASS H)
INSTALLATION	as required, preferably with actuator upright	
PROTECTION DEGREE	IP65 EN 60529 (DIN 40050) with plug connector	

▪ MOPD values are referred to "standard power" coil range. Please refer to coil chapter.

MATERIALS

BODY, ORIFICE	Brass UNI EN 12165 CW617N
ARMATURE TUBE	Stainless steel AISI Series 300
FIXED CORE	Stainless steel AISI Series 400
PLUNGER	Stainless steel AISI Series 400
PHASE DISPLACEMENT RING	Copper (Cu 99,9%) or gold plated copper
SPRING	Stainless steel AISI Series 300
SEALING	B=NBR, V=FKM

▪ **CE**
- 2014/35/EU (LVD)
- 2014/30/EU (EMC)
- 2014/68/EU (PED)
art. 4.3 up to 1"

▪ **UL** regognized and **VDE** approved coils are available for this series, please refer to coil section.

▪ **EXPLOSION PROOF COILS** suitable for zone 2-22 are available for this series. Please refer to ATEX coil section for further details.

Please read and agree our GENERAL CONDITIONS before placing an order. All the information are exclusive ownership of ODE S.r.l. All rights reserved ©ODE S.r.l.

▪ The fluids listed in the "technical data" tables should be considered as a recommendation. Please check the chemical compatibility of the fluids with the materials of the valve at RFQ stage.
▪ For spare parts list please refer to the dedicated chapter.

NO, 22 mm COIL

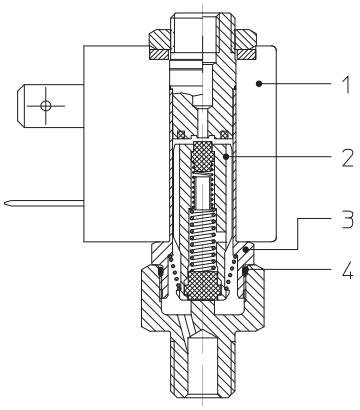

NO, 30 mm COIL

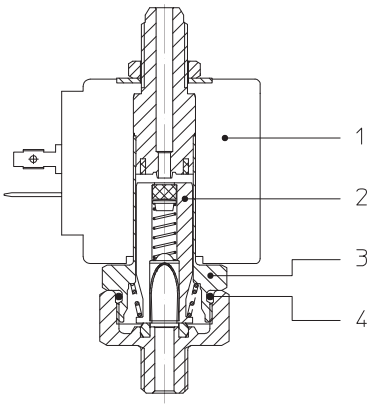

DRAWING 1

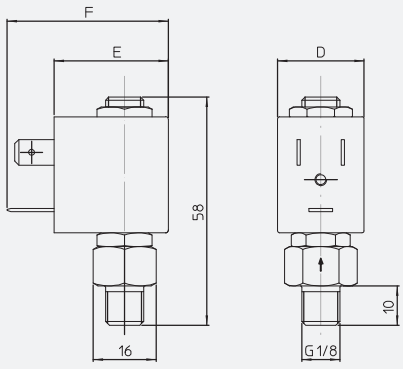

DRAWING 2

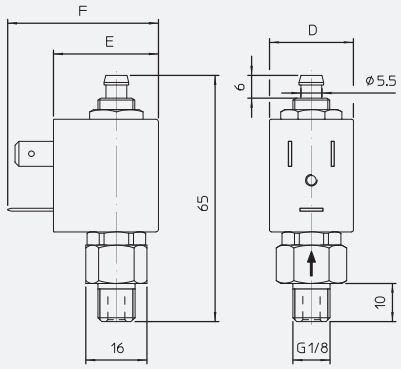

DRAWING 3

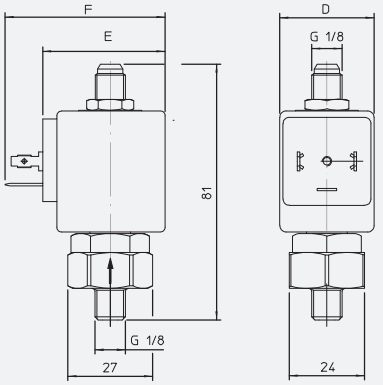

DRAWING 4

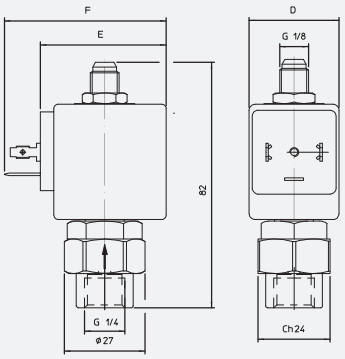

COIL SERIES	DIMENSIONS [mm]		
	D	E	F
L**05	22	28±1	39.5
B**08	30	42	54

2/2 NO

PIPE	ORIFICE SIZE	Kv	COIL SERIES	PRESSURE [bar]						CODE		DRAWING REFERENCE
				MIN	MOPD (AIR, GASES)		MOPD (LIQUIDS)		PS	BRASS	STAINLESS STEEL	
ISO 228/1	Ø [mm]	[l/min]			AC	DC	AC	DC				
G1/8	1,5	0,8	L**05	0	12	12	12	12	40	4144W0V15	-	1
	1,7	1,7	L**05	0	15	-	15	-	40	4144XPV17	-	2
	2,5	3,5	B**08	0	18	-	8	-	25	21M0AV25	-	3
				4	-	18	-	8	25	21M0AV25	-	3
G1/4	2,5	3,5	B**08	0	18	-	8	-	25	5315A0V25	-	4
					-	18	-	8	25	5315A0V25	-	4

- For sealing different from FKM replace the letter "V" with the ones corresponding to the other materials
  Series 21M0, series 5315 V=FKM, B=NBR
  Series 4144 V=FKM

CODIFICATION

I	II	III	IV	V
21M0	A		V	25

I. SERIES
21M0 - IN G1/8 (M), 30 mm coil
4144 - IN G1/8 (M), 22 mm coil
5315 - IN G1/4 (F), 30 mm coil

II. CORE TUBE TYPE
A - OUT G1/8 (M), 30 mm coil
W - OUT M5 (F), 22 mm coil
XP - OUT barbed port, 22 mm coil

III. PHASE DISP. RING MATERIAL
0 or blank- copper

IV. SEALING MATERIAL
V - FKM
B - NBR

V. ORIFICE Ø [mm] MULTIPLIED BY 10